FURUNO

Installation Manual
MARINE RADAR
Model FAR-2218(-BB)/2228(-BB/-NXT/-NXT-BB)/ FAR-2318/2328(-NXT)/FAR-2238S(-BB/-NXT/-NXT-BB)/ FAR-2338S(-NXT)/2328W/2338SW/2258(-BB)/2358

SAFETY INSTRUCTIONS i
SYSTEM CONFIGURATION iv
EQUIPMENT LISTS xiii

1. INSTALLATION 1-1
1.1 Antenna Unit (X-band Radar) 1-1
1.2 Antenna Unit (S-band Radar) 1-10
1.3 Monitor Unit 1-16
1.4 Control Unit 1-16
1.5 Power Supply Unit 1-23
1.6 Processor Unit 1-24
1.7 Transceiver Unit 1-26
1.8 Intelligent Hub (option) 1-26
1.9 Switching Hub (option) 1-28
1.10 Junction Box (option) 1-28

2. WIRING 2-1
2.1 Overview 2-1
2.2 Antenna Unit for X-band, TR-UP Radar 2-5
2.3 Antenna Unit for X-band, TR-DOWN Radar 2-20
2.4 Antenna Unit for S-band, TR-UP Radar 2-27
2.5 Antenna Unit for S-band, TR-DOWN Radar 2-41
2.6 Power Supply Unit 2-47
2.7 Transceiver Unit 2-54
2.8 Processor Unit 2-60
2.9 Monitor Unit 2-67
2.10 LAN Signal Converter 2-68
2.11 Junction Box (option) 2-72
2.12 Intelligent HUB (option) 2-73
2.13 VDR Connection 2-73

3. ADJUSTMENTS 3-1
3.1 How to Open the Radar Installation Menu 3-3
3.2 How to Align the Heading 3-3
3.3 How to Adjust the Sweep Timing 3-4
3.4 How to Suppress Main Bang 3-5
3.5 Other Settings 3-5
3.6 How to Control Charts 3-26

4. INPUT/OUTPUT DATA 4-1
4.1 Processor Unit 4-1
4.2 Sub Monitor 4-3

APPENDIX 1 JIS CABLE GUIDE AP-1
APPENDIX 2 DIGITAL INTERFACE AP-2

PACKING LISTS A-1
OUTLINE DRAWINGS D-1
INTERCONNECTION DIAGRAMS S-1

FURUNO ELECTRIC CO., LTD.

www.furuno.com

All brand and product names are trademarks, registered trademarks or service marks of their respective holders.

ECF
(Elemental Chlorine Free)
The paper used in this manual
is elemental chlorine free.

FURUNO ELECTRIC CO., LTD.

9-52 Ashihara-cho,
Nishinomiya, 662-8580, JAPAN

・FURUNO Authorized Distributor/Dealer

All rights reserved.

Printed in Japan

A : NOV. 2017
J : JAN. 28, 2020

Pub. No. IME-36520-J

(AKMU) FAR-2xx8 series

0 0 0 1 9 3 8 8 2 1 8

SAFETY INSTRUCTIONS

The installer must read the applicable safety instructions before attempting to operate or install the equipment.

DANGER	Indicates a potentially hazardous situation which, if not avoided, will result in death or serious injury.
WARNING	Indicates a potentially hazardous situation which, if not avoided, could result in death or serious injury.
CAUTION	Indicates a potentially hazardous situation which, if not avoided, can result in minor or moderate injury.

Warning, Caution Prohibitive Action Mandatory Action

DANGER

Wear a safety belt and hard hat when working on the antenna unit.

Serious injury or death can result if someone falls from the radar antenna mast.

WARNING

Do not open the equipment.

This equipment uses high voltage electricity which can shock, burn or cause serious injury. Only qualified personnel can work inside the equipment.

Construct a suitable service platform from which to install the antenna unit.

Serious injury or death can result if someone falls from the radar antenna mast.

Turn off the power at the mains switchboard before beginning the installation.

Fire, electrical shock or serious injury can result if the power is left on or is applied while the equipment is being installed.

Be sure that the power supply is compatible with the voltage rating of the equipment.

Connection of an incorrect power supply can cause fire or damage the equipment.

WARNING

Use only the specified power cable.

Fire or damage to the equipment can result if a different cable is used.

Do not install the units (other than the antenna unit) in a dusty environment, or one where the units may get wet from rain or water splash.

Dust or water in the units can result in fire, electrical shock, or damage to the equipment.

Attach protective earth securely to the ship's body.

The protective earth (grounding) is required for the AC power supply to prevent electrical shock.

CAUTION

For FAR-2x58 radars, turn the Processor Unit and the Power Supply Unit off before maintenance.

⚠ WARNING

Radio Frequency Radiation Hazard

The radar antenna emits electromagnetic radio frequency (RF) energy which can be harmful, particularly to your eyes. Never look directly into the antenna aperture from a close distance while the radar is in operation or expose yourself to the transmitting antenna at a close distance. Distances at which RF radiation level of 100, 50 and 10 W/m^2 are given in the table below.
If the antenna unit is installed at a close distance in front of the wheel house, your administration may require halt of transmission within a certain sector of antenna revolution. See the installation manual for how to manage blind sectors.

	Model	Transceiver	Magnetron	Antenna*	100 W/m^2	50 W/m^2	10 W/m^2
Magnetron radar	FAR-2218(-BB) FAR-2318	RTR-105 (12 kW)	FNE1201	XN12CF	0.6 m	1.4 m	4.4 m
				XN20CF	0.4 m	0.9 m	3.0 m
				XN24CF	0.3 m	0.6 m	2.5 m
	FAR-2228(-BB) FAR-2328	RTR-106 (25 kW)	MG5436	XN12CF	1.3 m	2.7 m	9.5 m
				XN20CF	1.0 m	1.7 m	6.8 m
				XN24CF	0.7 m	1.3 m	5.5 m
	FAR-2328W	RTR-108 (25 kW)		XN20CF	0.5 m	1.2 m	5.5 m
				XN24CF	0.3 m	0.9 m	4.0 m
	FAR-2238S(-BB) FAR-2338S	RTR-107 (30 kW)	MG5223F	SN24CF**	1.7 m	2.4 m	3.8 m
				SN30CF**	1.4 m	2.1 m	3.4 m
				SN36CF	N/A	0.5 m	4.6 m
	FAR-2338SW	RTR-109 (30 kW)		SN36CF	N/A	0.26 m	2.3 m
	FAR-2258/2358 FAR-2258(-BB)	RTR-122	9M31	XN24AF**	2.3 m	4.5 m	13.9 m
				XN30AF**	2.3 m	4.3 m	13.9 m
Solid state radar	FAR-2228-NXT(-BB) FAR-2328-NXT	RTR-123 (600 W)	———	XN12CF	0.3 m	0.7 m	3.3 m
				XN20CF	0.24 m	0.32 m	1.9 m
				XN24CF	0.19 m	0.29 m	1.6 m
	FAR-2238S-NXT(-BB) FAR-2338S-NXT	RTR-111 (250 W)		SN24CF**	N/A	N/A	N/A
				SN30CF**	N/A	N/A	N/A
				SN36CF	N/A	N/A	1.0 m

*: XN12CF: 4 ft, XN20CF: 6.5 ft, XN24CF/XN24AF: 8 ft, SN24CF: 8 ft, XN30AF/SN30CF: 10 ft, SN36CF: 12 ft

**: Unavailable on IMO-type radars

⚠ CAUTION

Observe the following compass safe distances to prevent deviation of a magnetic compass:

Unit	Standard compass	Steering compass
Antenna Unit (X-band, TR-UP, 12 kW, magnetron radar)	2.15 m	1.40 m
Antenna Unit (X-band, TR-UP, 25 kW, magnetron radar)	2.45 m	1.60 m
Antenna Unit (X-band, TR-UP, 50 kW, magnetron radar)	4.05 m	2.65 m
Antenna Unit (X-band, TR-UP, solid state radar)	1.15 m	0.70 m
Antenna Unit (S-band, TR-UP, magnetron radar)	3.05 m	1.90 m
Antenna Unit (S-band, TR-UP, solid state radar)	1.90 m	1.20 m
Antenna Unit (X-band, TR-DOWN)	1.90 m	1.20 m
Antenna Unit (S-band, TR-DOWN)	1.55 m	0.95 m

Unit	Standard compass	Steering compass
Processor Unit (RPU-025)	2.85 m	1.80 m
Power Supply Unit (PSU-019)	1.30 m	0.80 m
Monitor Unit (MU-190)	1.65 m	1.05 m
Monitor Unit (MU-231)	0.85 m	0.55 m
Monitor Unit (MU-270W)	0.90 m	0.55 m
Control Unit (RCU-014)	0.50 m	0.30 m
Control Unit (RCU-015)	0.95 m	0.60 m
Control Unit (RCU-016)	0.95 m	0.60 m
Control Unit (RCU-031)	0.30 m	0.30 m
Transceiver Unit (RTR-108)	2.00 m	1.25 m
Transceiver Unit (RTR-109)	4.50 m	2.90 m
Intelligent HUB (HUB-3000)	1.20 m	0.75 m
Switching HUB (HUB-100)	1.00 m	0.60 m
Junction Box (RJB-001)	1.10 m	0.70 m

Note: For more information, please refer to IMO SN/Circ.271 “Guidelines for the installation of shipborne radar equipment.”

SYSTEM CONFIGURATION

NOTICE

IMO-type radar(s) must be interconnected to the following type approved sensors.
For other radar types, it is recommended to connect the following type approved sensors:

- **EPFS meeting the requirements of the IMO resolution MSC.112(73).**
- **Gyrocompass (or equivalent devices) meeting the requirements of the IMO resolution A.424(XI).**
- **SDME meeting the requirements of IMO resolution MSC.96(72).**

The radar may be interconnected via HUB-3000 to other FURUNO processing units having approved LAN ports.

Standard connection

Basic configuration is shown with solid line. For footnotes, see "Notes" on page ix.

X-band (TR-UP), 12 kW/25 kW/600 W

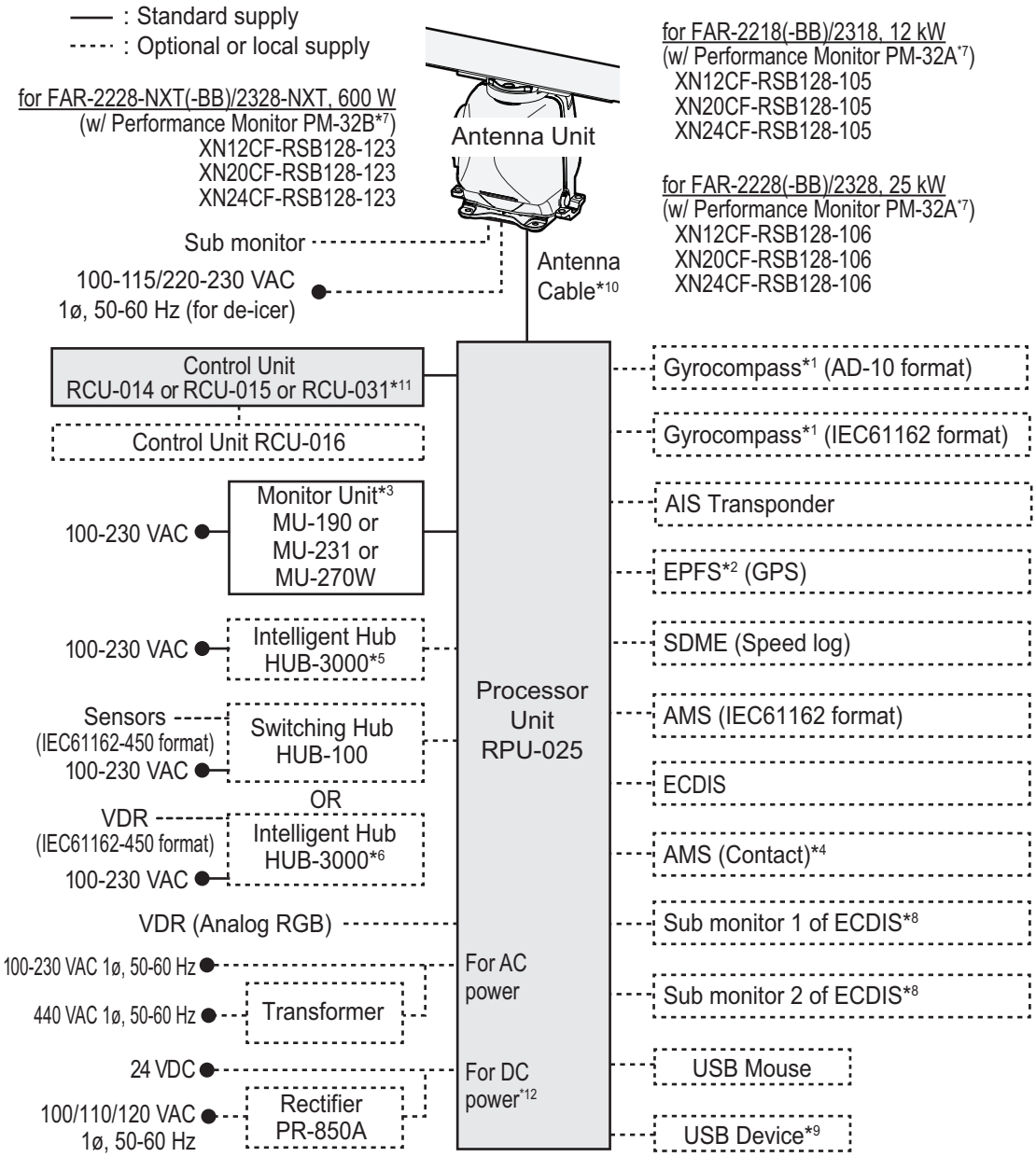

X-band (TR-UP), 50 kW

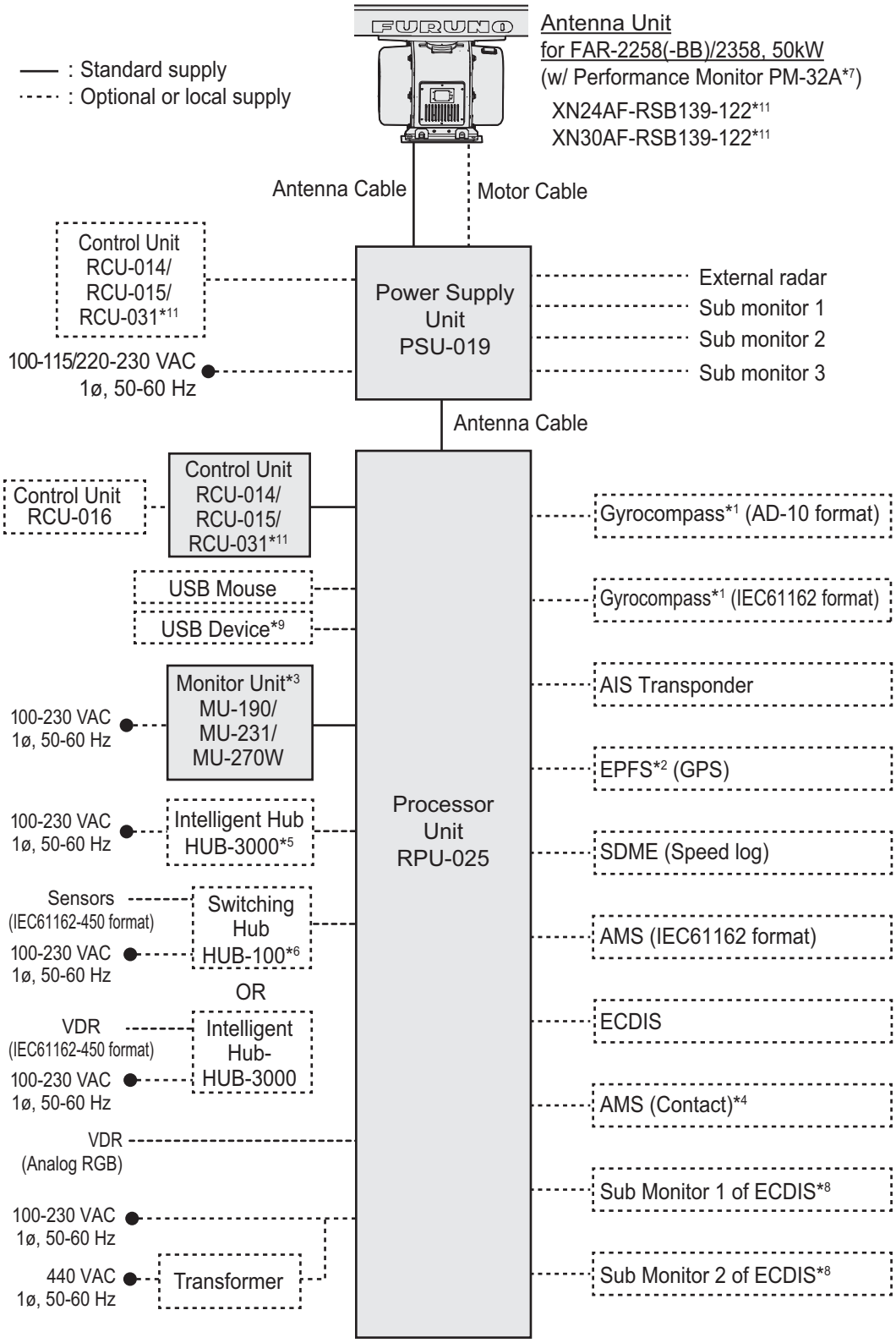

S-band (TR-UP)

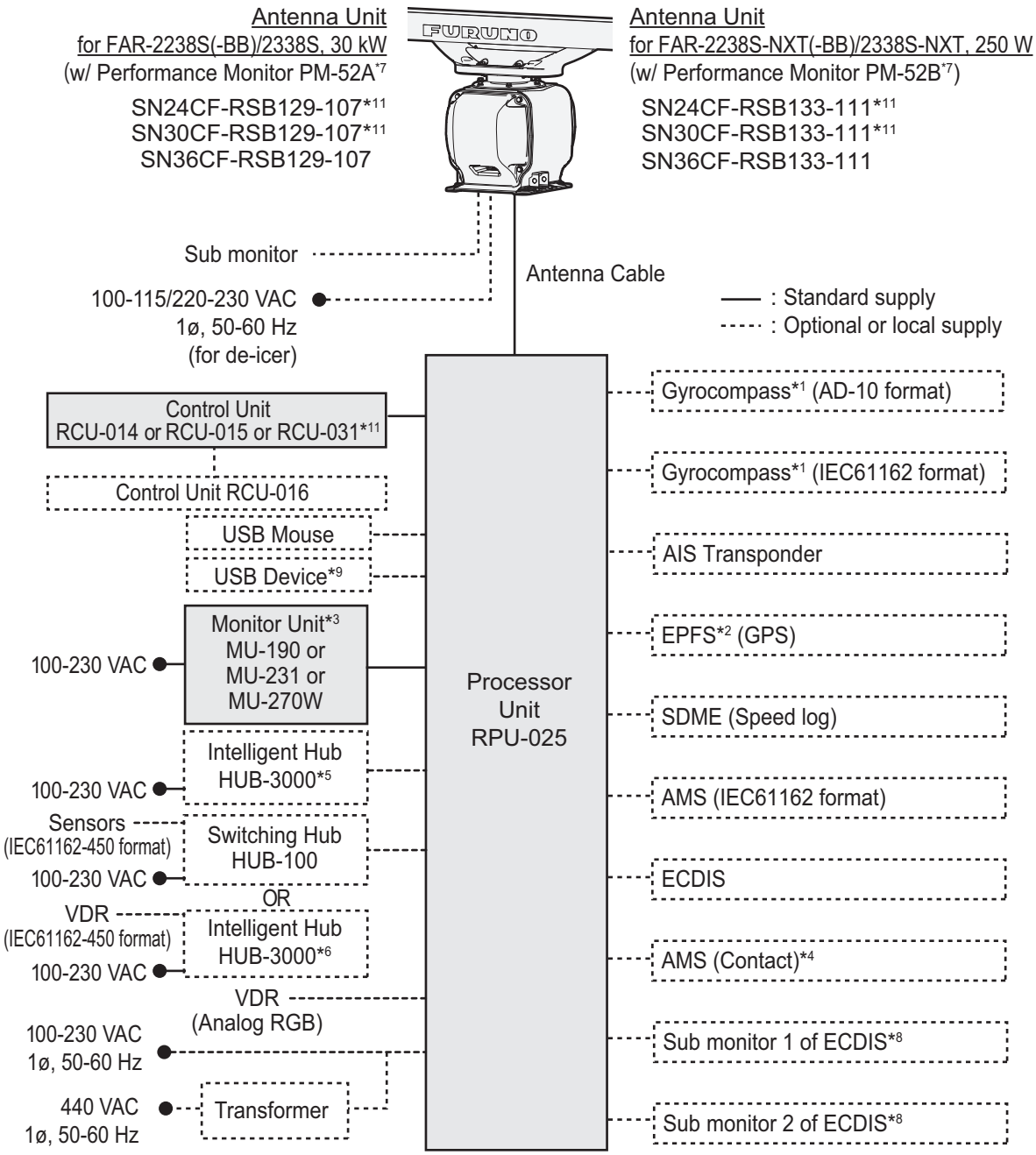
Antenna Unit
for FAR-2238S(-BB)/2338S, 30 kW
(w/ Performance Monitor PM-52A*7
SN24CF-RSB129-107*11
SN30CF-RSB129-107*11
SN36CF-RSB129-107
Antenna Unit
for FAR-2238S-NXT(-BB)/2338S-NXT, 250 W
(w/ Performance Monitor PM-52B*7)
SN24CF-RSB133-111*11
SN30CF-RSB133-111*11
SN36CF-RSB133-111
Sub monitor
100-115/220-230 VAC
1ø, 50-60 Hz
(for de-icer)
Antenna Cable
: Standard supply
: Optional or local supply
Control Unit
RCU-014 or RCU-015 or RCU-031*11
Control Unit RCU-016
USB Mouse
USB Device*9
Monitor Unit*3
MU-190 or
MU-231 or
MU-270W
100-230 VAC
Intelligent Hub
HUB-3000*5
100-230 VAC
Sensors
(IEC61162-450 format)
Switching Hub
HUB-100
100-230 VAC
OR
VDR
(IEC61162-450 format)
Intelligent Hub
HUB-3000*6
100-230 VAC
VDR
(Analog RGB)
100-230 VAC
1ø, 50-60 Hz
440 VAC
1ø, 50-60 Hz
Transformer
Processor
Unit
RPU-025
Gyrocompass*1 (AD-10 format)
Gyrocompass*1 (IEC61162 format)
AIS Transponder
EPFS*2 (GPS)
SDME (Speed log)
AMS (IEC61162 format)
ECDIS
AMS (Contact)*4
Sub monitor 1 of ECDIS*8
Sub monitor 2 of ECDIS*8

X-band (TR-DOWN)

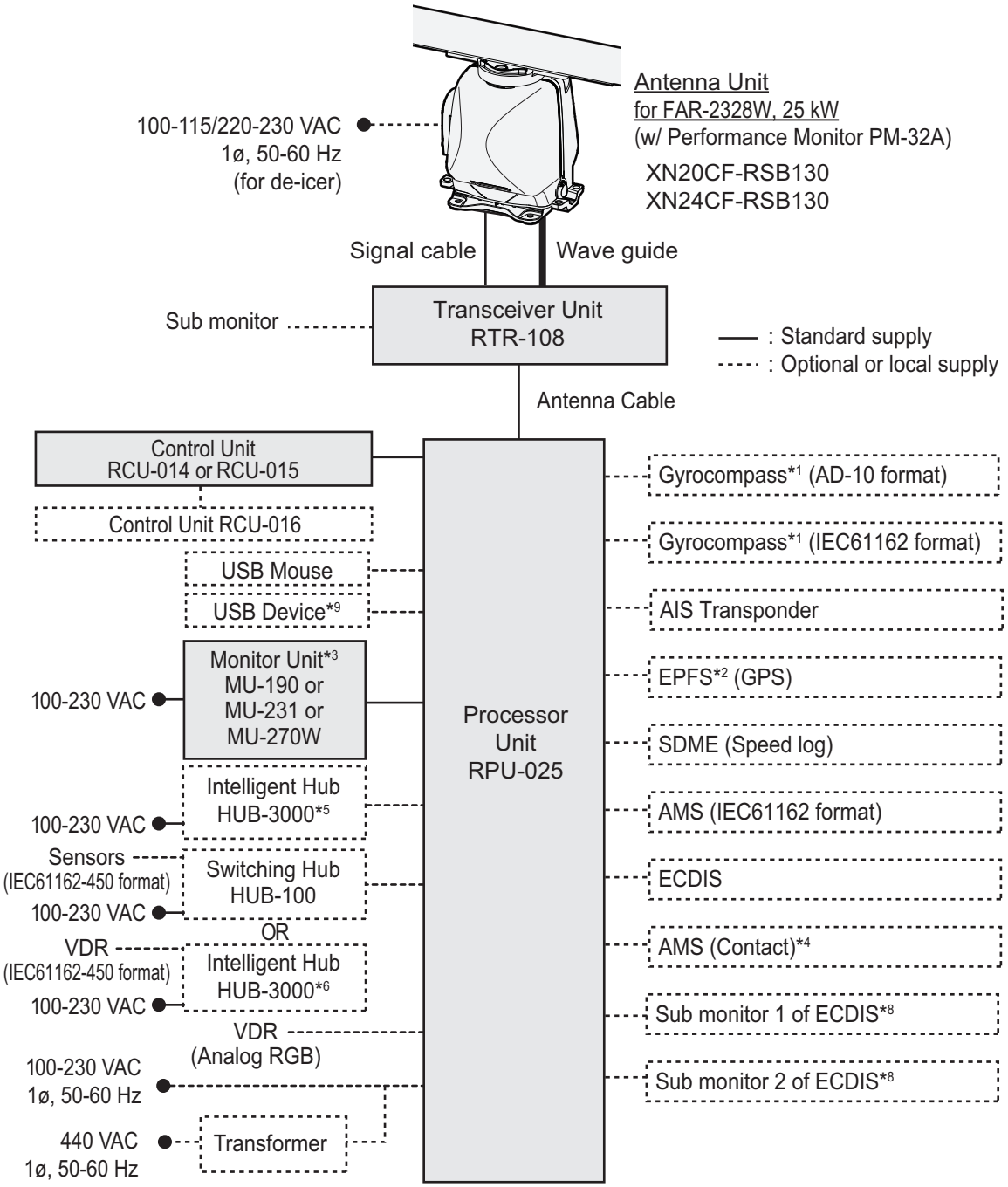

S-band (TR-DOWN)

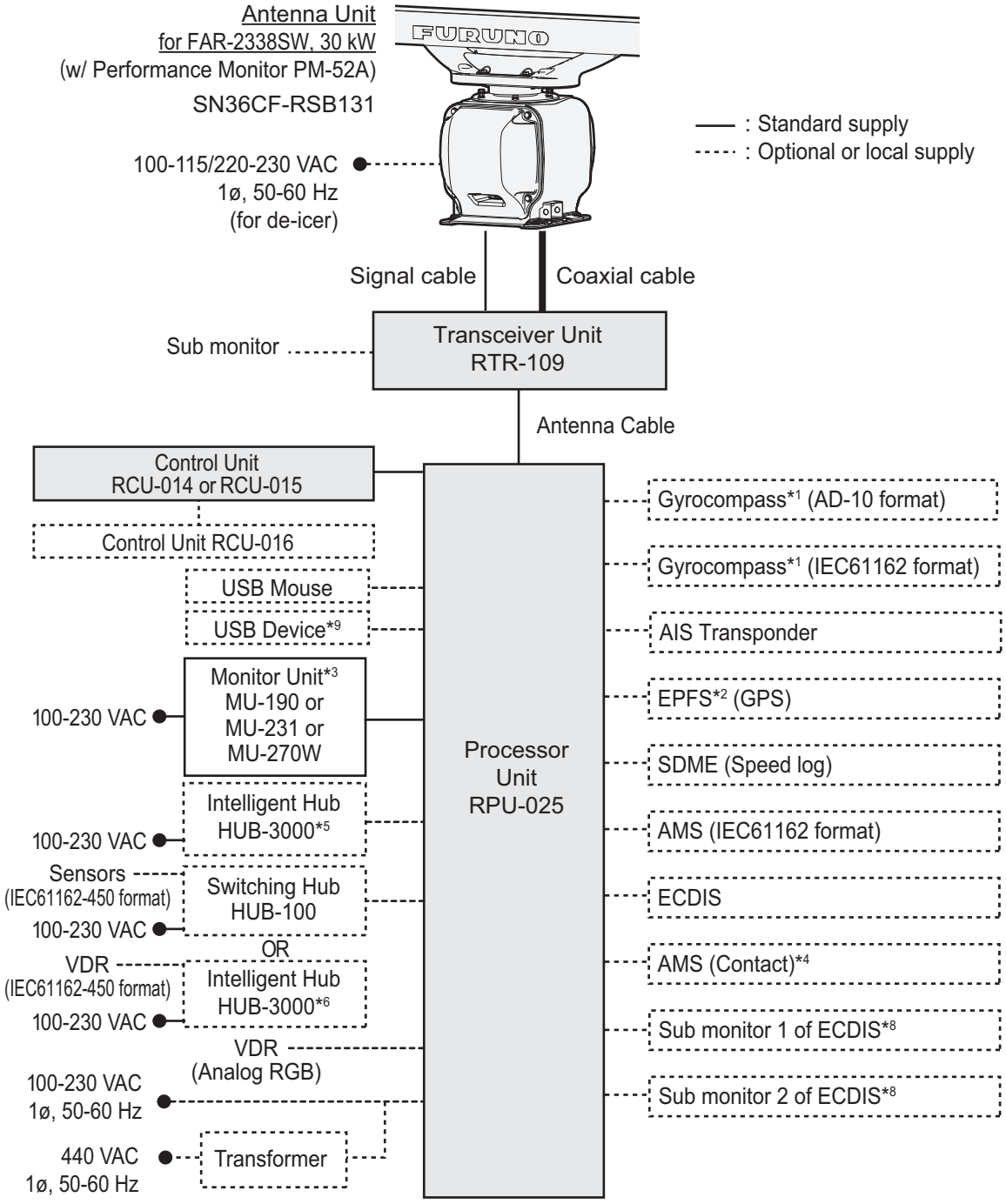

Category of units

Antenna Unit: Exposed to weather
Other units: Protected from the weather

Notes

1) The gyrocompass must be type approved for compliance with IMO resolution A.424(XI) (and/or resolution A.821(19) for installation on HSC). The gyrocompass must also have an update rate that is adequate for the ship's rate of turn. The update rate must be better than 40 Hz (HSC) or 20 Hz (conventional vessel).
2) The EPFS must be type approved for compliance with IMO resolution MSC.112(73).
3) These monitors have been approved by the IMO, MU-190 for CAT 2 and CAT 2H, MU-231/MU-270W for CAT 1 and CAT 1H. If a different monitor is to be used on IMO vessels, its effective diameter must meet the Category requirements:
   - CAT 1 and CAT 1H: effective diameter 320 mm or higher
   - CAT 2 and CAT 2H: effective diameter 250 mm or higher

   For installation, operation and viewing distance of other monitor, see its manuals.
   For BB type, a monitor unit is prepared by user.
4) Characteristics of contact output for Alarm:
   - (Load current) 250 mA
   - (Polarity) Normally Open: 2 ports, Normally Close: 2 ports
   - Serial I/O for alarm is also possible, which complies with IEC 61162-1.
5) For configurations with 3 or more radars/ECDIS (FMD-3100/FMD-3200/FMD-3300) connected, connect via the HUB-3000. For 2 radars, HUB-100 can be used. Connection to a FMD (ECDIS) is not available for C-type radars.
6) For configurations with a VDR connected, connect via the HUB-3000. Connection to a VDR is not available for C-type radars.
7) Some antenna configurations do not have an in-built Performance Monitor. This type of antenna is not usable for IMO-type radars.
8) For connecting non-FURUNO ECDIS only. For connection of radars or plotters, the connection must be done at the radar antenna (or the transceiver unit) via the sub monitor connector.
9) Available on C-type and A/B/W-type radars with Radar Plotter functionality
10) Junction boxes are required for antenna cable length greater than 100 m (only for TR-UP radar of X-band). Max. cable length is 400 m.
11) Unavailable on IMO-type radars.
12) Unavailable with FAR-2228-NXT, FAR-2228-NXT-BB or FAR-2328-NXT.

Interswitch connection

When multiple radars are used, connect units as shown in the figure below. This configuration lets each radar function as a standalone radar in case of HUB malfunction.

Solid lines indicate standard supply equipment. Dashed lines indicate optional or local supply equipment.

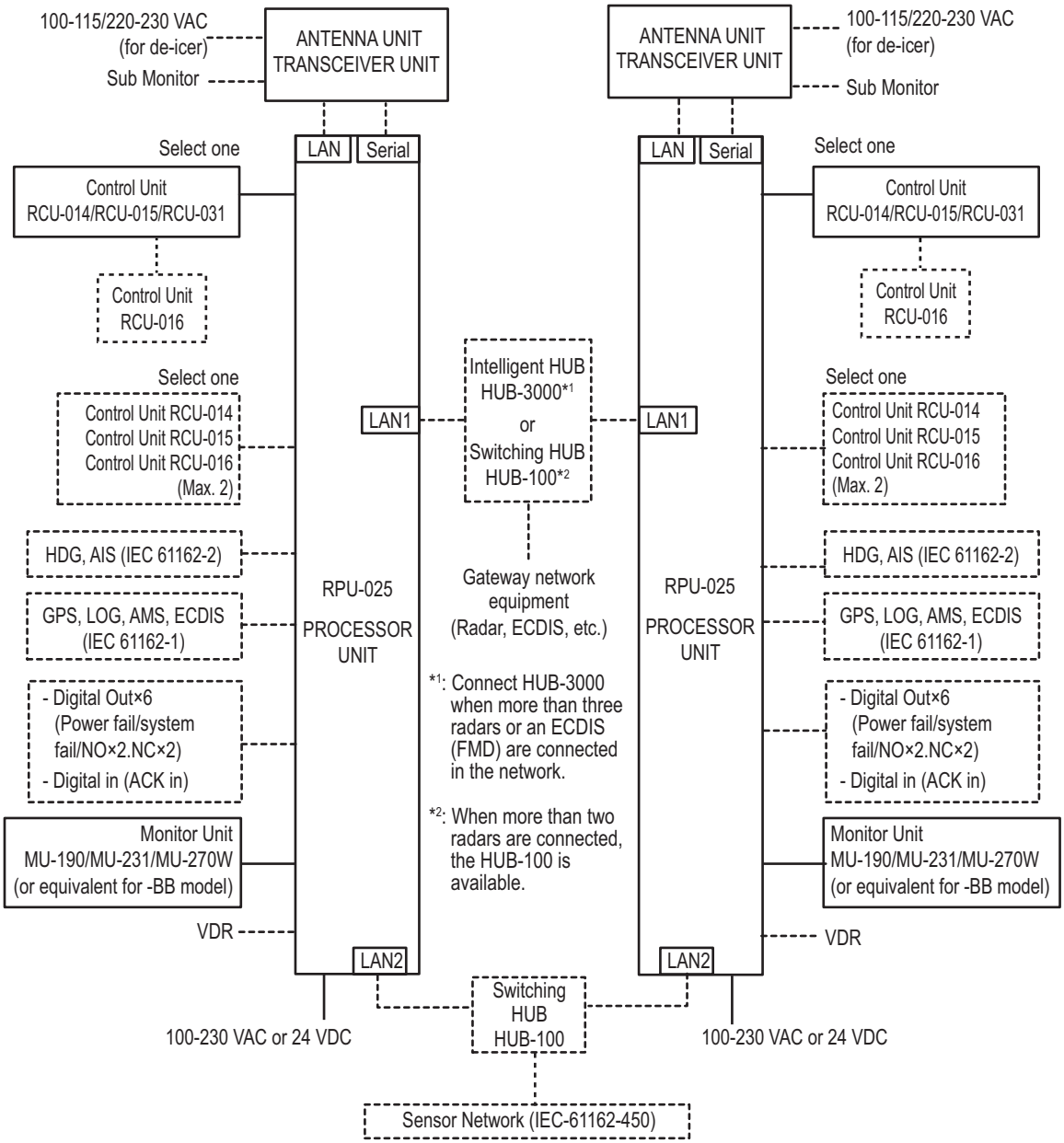

Radar Component Combinations

RADAR MODEL	TRANSCEIVER UNIT	ANTENNA UNIT	Remarks
FAR-2218(-BB), FAR-2318	RTR-105	XN12CF-RSB-128 XN20CF-RSB-128 XN24CF-RSB-128	
FAR-2228(-BB), FAR-2328	RTR-106		
FAR-2228-NXT(-BB), FAR-2328-NXT	RTR-123		
FAR-2258(-BB), FAR-2358	RTR-122	XN24AF-RSB139 XN30AF-RSB139	NOT available on IMO-type radars
FAR-2328W	RTR-108	XN20CF-RSB-130 XN24CF-RSB-130	
FAR-2238S(-BB), FAR-2338S	RTR-107	SN24CF-RSB-129 SN30CF-RSB-129 SN36CF-RSB-129	SN24CF/SN30CF are NOT available on IMO-type radars.
FAR-2338SW	RTR-109	SN36CF-RSB-131	
FAR-2238S-NXT(-BB), FAR-2338S-NXT	RTR-111	SN24CF-RSB-133 SN30CF-RSB-133 SN36CF-RSB-133	SN24CF/SN30CF are NOT available on IMO-type radars.

Radar Type and Function Availability

This radar series is available in six specification types to meet the requirements of Authorities, and function availability depends on specification type.

- IMO: IMO compliant
- A: Near-IMO specifications
- B: Non-Japanese fishing specifications
- C: Japanese fishing specifications
- R: Russian specifications
- W: Washington Ferry specifications

Also, the software version has two main versions as shown below. Radar type availability depends on the software version (Available: ✓, Not available: –).

Software version	Available type					
	IMO	A	B	C	R	W
01.**	✓	✓	✓	–	✓	✓
50.**	✓	–	–	✓	–	–

Note: IMO-type radars with software version 01.** are different from those with software version 50.**.

The table below shows those functions which are limited to a specific radar type (Available: ✓, Not available: –). The menus which are not mentioned in the table below are available for all types. This manual provides descriptions for all functions in this radar series.

Specification type and function availability in [RADAR INSTALLATION] menu

Function (Menu items)		Type						Remarks for software ver.
		IMO	A	B	C	R	W	
SCANNER	DUAL RADAR SETTINGS	–	–	✓	–	–	–	For 01.xx ver.
INSTALLA-TION	RANGE UNIT	–	–	✓	✓	–	✓	
	ICE MODE SETTINGS	✓	✓	✓	–	✓	✓	For 01.xx ver.
TT PRESET	TT NO.	–	–	–	✓	–	–	For **50**.xx ver.
ALERT I/F SETTINGS	ALERT OUT 1/2/3/4 • DESTINATION LEAVE • INTRUSION BAN • WATER TEMP ALERT • CURRENT RIP • DEPTH ALERT • TARGET ALARM	–	–	–	✓	–	–	For **50**.xx ver.
	AIS CAPACITY FULL(A)	–	–	–	–	✓	–	For 01.xx ver.
	AIS CAPACITY FULL(C)	–	–	–	–	✓	–	For 01.xx ver.
INPUT PORT SETTINGS	EPFS • EPFS1 INPUT DTM SEL. • EPFS2 INPUT DTM SEL.	–	–	–	✓	–	–	For **50**.xx ver.
NETWORK SETTINGS	VDR SETTINGS	✓	✓	✓	–	✓	✓	
OTHER SETTINGS	OVERLAY1/2	✓	✓	✓	–	✓	✓	
	RP UPDATE	–	✓*	✓*	✓	–	✓*	
	SHUTTLE FERRY SWITCH	✓	✓	✓	–	✓	✓	

*: For A/B-type radars with Radar Plotter functionality

EQUIPMENT LISTS

Standard supply

For X-band TR-UP magnetron radar: FAR-2218(-BB)/2228(-BB)/2318/2328

Name	Type	Code No.	Qty	Remarks	
Antenna Unit	XN12CF-RSB128-105	-	1	4 ft, 12 kW	w/ PM-32A*
	XN12CF-RSB128-106	-		4 ft, 25 kW	
	XN20CF-RSB128-105	-		6.5 ft, 12 kW	
	XN20CF-RSB128-106	-		6.5 ft, 25 kW	
	XN24CF-RSB128-105	-		8 ft, 12 kW	
	XN24CF-RSB128-106	-		8 ft, 25 kW	
Processor Unit	RPU-025	-	1	For AC power/DC power	
Monitor Unit	MU-190	-	1	For FAR-22x8	
	MU-231	-		For FAR-23x8	
	MU-270W	-			
Control Unit	RCU-014	-	1	Standard type	
	RCU-015	-		Trackball type	
	RCU-031	-		For BB type of C-type radars	
Installation Materials	CP03-35201	001-249-860	1	For radiator	
	CP03-35401	001-254-980	1	For RSB (no de-icer)	
	CP03-35403	001-270-070		For RSB (w/de-icer)	
	CP03-35500 [15M]	000-024-096	1	For Antenna Unit, 15 m	
	CP03-35510 [30M]	000-024-097		For Antenna Unit, 30 m	
	CP03-35520 [40M]	000-024-098		For Antenna Unit, 40 m	
	CP03-35530 [50M]	000-024-099		For Antenna Unit, 50 m	
	CP03-37801	001-489-150	1	For RPU-025, AC power	
	CP03-37803	001-558-550	1	For RPU-025, DC power	
	CP03-25604	001-418-420	1	For RCU-014/015	
Accessories	FP03-09880	001-574-480	1	For RCU-014	
	FP03-09860	001-419-140	1	For RCU-015	
Spare Parts	SP03-17641	001-249-740	1	Fuse for Processor Unit of AC power • FGBO-A 250V 7A PBF, 2 pcs. (000-178-084-10)	
	SP03-17681	001-558-560	1	Fuse for Processor Unit of DC power • FGBO 125V 20A, 2 pcs. (000-155-780-10)	
	SP03-19701	001-531-630	1	Fuse for Antenna Unit w/de-icer • FGBO-A 250V 3A PBF, 4 pcs. (000-155-841-10)	
Hoist X-Band Antenna Instructions	C32-01302-*	000-178-042-**	1		

*: Some antenna configurations do not have a built-in Performance Monitor. The Performance Monitor PM-32A is mandatory for IMO-type radars

For X-band TR-UP magnetron radar: FAR-2258(-BB)/2358

Name	Type	Code No.	Qty	Remarks	
Antenna Unit	XN24AF-RSB139-122	-	1	8 ft, 50 kW	w/PM-32A*, Unavailable on IMO-type radars.
	XN30AF-RSB139-122	-		10 ft, 50 kW	
Processor Unit	RPU-025	-	1		
Power Supply Unit	PSU-019	-	1		
Monitor Unit	MU-190	-	1	For FAR-2258	
	MU-231	-		For FAR-2358	
	MU-270W	-			
Control Unit	RCU-014	-	1	Standard type	
	RCU-015	-		Trackball type	
	RCU-031	-		Compact type	
Installation Materials	CP03-19101	001-510-420	1	For radiator	
	CP03-38700	000-036-619	1	For RSB	
	CP03-33300 [15M]	000-017-041	1	For Antenna Unit, 15 m	
	CP03-33310 [20M]	000-017-042		For Antenna Unit, 20 m	
	CP03-33320 [30M]	000-017-043		For Antenna Unit, 30 m	
	CP03-33340 [50M]	000-036-639		For Antenna Unit, 50 m	
	CP03-33350 [70M]	000-036-640		For Antenna Unit, 70 m	
	CP03-38900 [5M]	000-036-633	1	Cable for RPU-025, 5 m	
	CP03-38910 [10M]	000-036-634	1	Cable for RPU-025, 10 m	
	CP03-38920 [15M]	000-036-635	1	Cable for RPU-025, 15 m	
	CP03-38930 [30M]	000-036-636	1	Cable for RPU-025, 30 m	
	CP03-38940 [40M]	000-036-637	1	Cable for RPU-025, 40 m	
	CP03-38950 [50M]	000-036-638	1	Cable for RPU-025, 50 m	
	CP03-38960 [1.5M]	000-036-786	1	Cable for RPU-025, 1.5 m	
	CP03-37801	001-489-150	1	For RPU-025	
	CP03-25604	001-418-420	1	For RCU-014/015	
	CP10-09600	000-036-274	1	For RCU-031	
	CP03-38801	001-547-980	1	For PSU-019	
Accessories	FP03-09880	001-574-480	1	For RCU-014	
	FP03-09860	001-419-140	1	For RCU-015	
Spare Parts	SP03-17641	001-249-740	1	Fuse for Processor Unit • FGBO-A 250V 7A PBF, 2 pcs. (000-178-084-10)	
	SP03-15501	008-572-730	1	For PSU, 100 VAC • FGBO-A 250V 5A PBF, 2 pcs. (000-155-840-10)	
	SP03-15502	008-572-740	1	For PSU, 220 VAC • FGBO-A 250V 3A PBF, 2 pcs. (000-155-841-10)	
Antenna Hoist Instructions	C32-01805-*	000-196-329-**	1		

*: Some antenna configurations do not have a built-in Performance Monitor.

For X-band TR-UP solid state radar: FAR-2228-NXT(-BB)/2328-NXT

Name	Type	Code No.	Qty	Remarks	
Antenna Unit	XN12CF-RSB128-123	-	1	4 ft, 600 W	w/ PM-32B*
	XN20CF-RSB128-123	-		6.5 ft, 600 W	
	XN24CF-RSB128-123	-		8 ft, 600 W	
Processor Unit	RPU-025	-	1		
Monitor Unit	MU-190	-	1	For FAR-22x8-NXT(-BB)	
	MU-231	-		For FAR-23x8-NXT	
	MU-270W	-			
Control Unit	RCU-014	-	1	Standard type	
	RCU-015	-		Trackball type	
Installation Materials	CP03-35201	001-249-860	1	For radiator	
	CP03-35401	001-254-980	1	For RSB (no de-icer)	
	CP03-35403	001-270-070		For RSB (w/de-icer)	
	CP03-35500 [15M]	000-024-096	1	For antenna unit, 15 m	
	CP03-35510 [30M]	000-024-097		For antenna unit, 30 m	
	CP03-35520 [40M]	000-024-098		For antenna unit, 40 m	
	CP03-35530 [50M]	000-024-099		For antenna unit, 50 m	
	CP03-37801	001-489-150	1	For RPU-025	
	CP03-25604	008-539-850	1	For RCU-014/015	
Accessories	FP03-09880	001-574-480	1	For RCU-014	
	FP03-09860	008-535-690	1	For RCU-015	
Spare Parts	SP03-17641	001-249-740	1	Fuse for processor unit • FGBO-A 250V 7A PBF, 2 pcs. (000-178-084-10)	
	SP03-19701	001-531-630	1	Fuse for antenna unit w/de-icer • FGBO-A 250V 3A PBF, 4 pcs. (000-155-841-10)	
Hoist X-Band Antenna Instructions	C32-01302-*	000-178-042-**	1		

*: Some antenna configurations do not have a built-in Performance Monitor. The Performance Monitor PM-32B is mandatory for IMO-type radars

For S-band TR-UP magnetron radar: FAR-2238S(-BB)/2338S

Name	Type	Code No.	Qty	Remarks	
Antenna Unit	SN24CF-RSB129-107	-	1	8 ft, 30 kW	• Unavailable on IMO-type radars. • w/PM-52A*
	SN30CF-RSB129-107	-		10 ft, 30 kW	
	SN36CF-RSB129-107	-		12 ft, 30 kW	w/ PM-52A*
Processor Unit	RPU-025	-	1		
Monitor Unit	MU-190	-	1	For FAR-2238S	
	MU-231	-		For FAR-2338S	
	MU-270W	-			
Control Unit	RCU-014	-	1	Standard type	
	RCU-015	-		Trackball type	
	RCU-031	-		For BB type of C-type radars	
Installation Materials	CP03-35202	001-249-880	1	For radiator	
	CP03-35402	001-255-430	1	For RSB (no de-icer)	
	CP03-35404	001-270-080	1	For RSB (w/de-icer)	
	CP03-35500 [15M]	000-024-096	1	For Antenna Unit, 15 m	
	CP03-35510 [30M]	000-024-097		For Antenna Unit, 30 m	
	CP03-35520 [40M]	000-024-098		For Antenna Unit, 40 m	
	CP03-35530 [50M]	000-024-099		For Antenna Unit, 50 m	
	CP03-37801	001-489-150	1	For RPU-025	
	CP03-25604	001-418-420	1	For RCU-014/015	
Accessories	FP03-09880	001-574-480	1	For RCU-014	
	FP03-09860	001-419-140	1	For RCU-015	
Spare Parts	SP03-17641	001-249-740	1	Fuse for Processor Unit of 24 rpm radar • FGBO-A 250V 7A PBF, 2 pcs. (000-178-084-10)	
	SP03-17651	001-249-750	1	Fuse for Processor Unit of 42 rpm radar • FGBO-A 250V 3A PBF, 2 pcs. (000-155-841-10) • FGBO-A 250V 7A PBF, 2 pcs. (000-178-084-10)	
	SP03-19701	001-531-630	1	Fuse for Antenna Unit w/de-icer • FGBO-A 250V 3A PBF, 4 pcs. (000-155-841-10)	
Hoist S-band Antenna Manual	C32-01303-*	000-178-043-**	1		

*: Some antenna configurations do not have a built-in Performance Monitor. The Performance Monitor PM-52A is mandatory for IMO-type radars

For S-band TR-UP solid state radar: FAR-2238S-NXT(-BB)/FAR-2338S-NXT

Name	Type	Code No.	Qty	Remarks	
Antenna Unit	SN24CF-RSB133-111	-	1	8 ft, 250 W	• Unavailable on IMO-type radars. • w/PM-52B*
	SN30CF-RSB133-111	-	1	10 ft, 250 W	
	SN36CF-RSB133-111	-	1	12 ft, 250 W	w/PM-52B*
Processor Unit	RPU-025	-	1		
Monitor Unit	MU-190	-	1	For FAR-2238S-NXT	
	MU-231	-		For FAR-2338S-NXT	
	MU-270W	-			
Control Unit	RCU-014	-	1	Standard type	
	RCU-015	-		Trackball type	
	RCU-031	-		For BB type of C-type radars	
Installation Materials	CP03-35202	001-249-880	1	For radiator	
	CP03-35402	001-255-430	1	For RSB (no de-icer)	
	CP03-35404	001-270-080	1	For RSB (w/de-icer)	
	CP03-35500 [15M]	000-024-096	1	For Antenna Unit, 15 m	
	CP03-35510 [30M]	000-024-097		For Antenna Unit, 30 m	
	CP03-35520 [40M]	000-024-098		For Antenna Unit, 40 m	
	CP03-35530 [50M]	000-024-099		For Antenna Unit, 50 m	
	CP03-37801	001-489-150	1	For RPU-025	
	CP03-25604	001-418-420	1	For RCU-014/015	
Accessories	FP03-09880	001-574-480	1	For RCU-014	
	FP03-09860	001-419-140	1	For RCU-015	
Spare Parts	SP03-17641	001-249-740	1	Fuse for Processor Unit of 24 rpm radar • FGBO-A 250V 7A PBF, 2 pcs. (000-178-084-10)	
	SP03-17651	001-249-750	1	Fuse for Processor Unit of 42 rpm radar • FGBO-A 250V 3A PBF, 2 pcs. (000-155-841-10) • FGBO-A 250V 7A PBF, 2 pcs. (000-178-084-10)	
	SP03-19701	001-531-630	1	Fuse for Antenna Unit w/de-icer • FGBO-A 250V 3A PBF, 4 pcs. (000-155-841-10)	
Hoist S-band Antenna Manual	C32-01303-*	000-178-043-**	1		

*: Some antenna configurations do not have a built-in Performance Monitor. The Performance Monitor PM-52B is mandatory for IMO-type radars

For X-band TR-DOWN radar: FAR-2328W

Name	Type	Code No.	Qty	Remarks	
Antenna Unit	XN20CF-RSB130	-	1	6.5 ft	w/PM-32A*
	XN24CF-RSB130	-		8 ft	
Transceiver Unit	RTR-108	-	1		
Processor Unit	RPU-025	-	1		
Monitor Unit	MU-231	-	1		
	MU-270W	-			
Control Unit	RCU-014	-	1	Standard type	
	RCU-015	-		Trackball type	
Installation Materials	CP03-35201	001-249-860	1	For radiator	
	CP03-35901	001-300-540	1	For RSB (no de-icer)	
	CP03-35902	001-300-550		For RSB (w/de-icer)	
	CP03-35500[15M]	000-024-096	1	For Antenna Unit, 15 m	
	CP03-35510[30M]	000-024-097		For Antenna Unit, 30 m	
	CP03-35520[40M]	000-024-098		For Antenna Unit, 40 m	
	CP03-35530[50M]	000-024-099		For Antenna Unit, 50 m	
	CP03-37801	001-489-150	1	For RPU-025	
	CP03-25604	001-418-420	1	For RCU-014/015	
	CP03-16400	000-086-743	1	w/CP03-16401	
	CP03-16410	000-086-744		Flexible waveguide, 20 m w/CP03-16411	
	CP03-16420	000-086-745		Flexible waveguide, 30 m w/CP03-16411	
	CP03-16430	000-086-746		Flexible waveguide, 50 m w/CP03-16411	
Accessories	FP03-09880	001-574-480	1	For RCU-014	
	FP03-09860	001-419-140	1	For RCU-015	
Spare Parts	SP03-17641	001-249-740	1	Fuse for Processor Unit of 24 rpm radar • FGBO-A 250V 7A PBF, 2 pcs. (000-178-084-10)	
	SP03-19701	001-531-630	1	Fuse for Antenna Unit w/de-icer • FGBO-A 250V 3A PBF, 4 pcs. (000-155-841-10)	
Hoist X-Band Antenna Instructions	C32-01302-*	000-178-042-**	1		

*: The Performance Monitor PM-32A is mandatory for IMO-type radars

For S-band TR-DOWN radar: FAR-2338SW

Name	Type	Code No.	Qty	Remarks
Antenna Unit	SN36CF-RSB131	-	1	12 ft, w/PM-52A*
Transceiver Unit	RTR-109	-	1	
Processor Unit	RPU-025	-	1	
Monitor Unit	MU-231	-	1	
	MU-270W	-		
Control Unit	RCU-014	-	1	Standard type
	RCU-015	-		Trackball type
Installation Materials	CP03-35202	001-249-880	1	For radiator
	CP03-36101	001-301-200	1	For RSB (no de-icer)
	CP03-36102	001-301-360		For RSB (w/de-icer)
	CP03-35500[15M]	000-024-096	1	For Antenna Unit, 15 m
	CP03-35510[30M]	000-024-097		For Antenna Unit, 30 m
	CP03-35520[40M]	000-024-098		For Antenna Unit, 40 m
	CP03-35530[50M]	000-024-099		For Antenna Unit, 50 m
	CP03-37801	001-489-150	1	For RPU-025
	CP03-25604	001-418-420	1	For RCU-014/015
	CP03-36300	000-025-573	1	Coax cable, 20 m
	CP03-36310	000-025-574		Coax cable, 30 m
Accessories	FP03-09880	001-574-480	1	For RCU-014
	FP03-09860	001-419-140	1	For RCU-015
Spare Parts	SP03-17641	001-249-740	1	Fuse for Processor Unit of 24 rpm radar • FGBO-A 250V 7A PBF, 2 pcs. (000-178-084-10)
	SP03-17651	001-249-750	1	Fuse for Processor Unit of 42 rpm radar • FGBO-A 250V 3A PBF, 2 pcs. (000-155-841-10) • FGBO-A 250V 7A PBF, 2 pcs. (000-178-084-10)
	SP03-19701	001-531-630	1	Fuse for Antenna Unit w/de-icer • FGBO-A 250V 3A PBF, 4 pcs. (000-155-841-10)
Hoist S-Band Antenna Instructions	C32-01303-*	000-178-043-**	1	

*: The Performance Monitor PM-52A is mandatory for IMO-type radars

Console type (RCN-319/323/327)

Name	Type	Code No.	Qty.	Remarks
Standard Console	RCN-319	-	1	For 19-inch monitor
	RCN-323	-		For 23-inch monitor
	RCN-327	-		For 27-inch monitor
Spare Parts	SP03-19200	000-034-305	1	For X-band radar, S-band (24rpm) radar, without HUBs.
	SP03-19210	000-034-306		For S-band (42rpm) radar, without HUBs.
	SP03-19220	000-034-307		For X-band radar, S-band (24rpm) radar, w/ HUB-100.
	SP03-19230	000-034-308		For S-band (42rpm) radar, w/ HUB-100.
	SP03-19240	000-034-309		For X-band radar, S-band (24rpm) radar, w/ HUB-3000.
	SP03-19250	000-034-310		For S-band (42rpm) radar, w/ HUB-3000.
	SP03-19260	000-034-311		For X-band radar, S-band (24rpm) radar, w/ HUB-100 and HUB-3000.
	SP03-19270	000-034-312		For S-band (42rpm) radar, w/ HUB-100 and HUB-3000.
Installation Materials	CP03-38000	000-034-321	1	
Accessories	FP03-12700	000-034-322	1	

Console type (RCN-305/306)

Name	Type	Code No.	Qty.	Remarks
Standard Console	RCN-306	-	1	For 19-inch monitor
	RCN-305	-		For 23-inch monitor
Spare Parts	SP03-19200	000-034-305	1	For X-band radar, S-band (24rpm) radar, without HUBs.
	SP03-19220	000-034-307		For X-band radar, S-band (24rpm) radar, w/ HUB-100.
	SP03-19240	000-034-309		For X-band radar, S-band (24rpm) radar, w/ HUB-3000.
	SP03-19260	000-034-311		For X-band radar, S-band (24rpm) radar, w/ HUB-100 and HUB-3000.
Installation Materials	CP03-38000	000-034-321	1	
Accessories	FP03-12800	000-036-847	1	

Optional supply

Name	Type	Code No.	Remarks
Control Unit	RCU-014	-	Standard type
	RCU-015	-	Trackball type
	RCU-016	-	Trackball type
	RCU-031	-	Compact type
Junction Box	RJB-001	000-083-355	

Name	Type	Code No.	Remarks
AD Converter	AD-100-E	-	
Signal Cable Assy.	S03-9-5 (8-8P)	008-206-640	For sub monitor of ECDIS, 5 m, RW-4864 w/VH8 connector
	S03-9-10 (8-8P)	008-206-650	For sub monitor of ECDIS, 10 m, RW-4864 w/VH8 connector
	S03-9-15 (8-8P)	008-209-160	For sub monitor of ECDIS, 15 m, RW-4864 w/VH8 connector
Switching HUB	HUB-100	-	
Intelligent HUB	HUB-3000	-	
Deicer Kit	OP03-226	001-254-320	For X-band, TR-UP radar
	OP03-227	001-254-330	For S-band, TR-UP radar
	OP03-231	001-305-060	For X-band, TR-DOWN radar
	OP03-232	001-305-070	For S-band, TR-DOWN radar
Installation Materials	CP03-28900(10M)	000-082-658	LAN cable for sensor network
	CP03-28910(20M)	000-082-659	
	CP03-28920(30M)	000-082-660	
Monitor Unit	MU-190	-	19-inch monitor
	MU-231	-	23.1- inch monitor
	MU-270W	-	27-inch wide monitor
Hood Assembly	OP26-6	001-080-930	For MU-190
	OP26-16	001-116-740-01	For MU-231
Hood Assembly (Front)	OP26-32	001-439-090	For MU-270W
Hood Assembly (Rear)	OP26-33	001-439-110	For MU-270W
Flush Mount Kit	OP26-12	001-116-280	For MU-190
	OP26-17	001-116-750	For MU-231
Flush Mount Assembly (Rear)	OP26-31	001-439-070	For MU-270W
Flushmount Kit	FP03-09870	008-535-630	For RCU-014/015/016, fixing at rear
Flush Mount Kit	OP03-245	001-489-470	For RCU-014, using with panel
Connection Stand (20)	OP03-183	008-535-640	
Connection Stand (23)	OP03-184	008-535-650	
Connector	CP03-28901	008-542-460	LAN modular plug
Signal Cable Assy.	S03-92-15(8P)	001-259-890	For sub monitor, 15 m, RW-00136 w/VH8 connector
	S03-92-30(8P)	001-259-900	For sub monitor, 30 m, RW-00136 w/VH8 connector
	S03-92-40(8P)	001-259-910	For sub monitor, 40 m, RW-00136 w/VH8 connector
	S03-92-50(8P)	001-259-920	For sub monitor, 50 m, RW-00136 w/VH8 connector
Bracket Assembly	OP26-21	001-139-310	For MU-190 connection
Connection stand (19)	OP26-20	001-139-300	For MU-190 connection
Clamp Assembly	OP03-182	008-535-620	For RCU-014

Name	Type	Code No.	Remarks
Cable Assy.	DVI-D/D S-LINK 5M	001-133-960-10	Between Processor Unit and monitor unit, 5 m
	DVI-D/D S-LINK 10M	001-133-980-10	Between Processor Unit and monitor unit, 10 m
LAN Cable Assembly	MOD-Z072-020+	001-167-880-10	For LAN cable between RPU-025 and HUB-100, 2 m
	MOD-Z072-050+	001-167-890-10	For LAN cable between RPU-025 and HUB-100, 5 m
Cable Assy.	DSUB9P-X2-A-L5M	001-252-580	Brilliance control cable for Hatteland monitor, 5 m
	DSUB9P-X2-A-L10M	001-252-590	Brilliance control cable for Hatteland monitor, 10 m
Cable Assembly	XH10P-W-6P L=20M	001-437-540	Processor Unit-Control Unit, 20 m
	XH10P-W-6P L=30M	001-437-550	Processor Unit-Control Unit, 30 m
Cable Assembly	XH10P-W-5P-A L=10M	001-247-690	For Control Unit (RCU-016), 10 m
	XH10P-W-5P-A L=20M	001-247-700	For Control Unit (RCU-016), 20 m
	XH10P-W-5P-A L=30M	001-247-710	For Control Unit (RCU-016), 30 m
	XH10P-W-5P-A L=1.5M	001-489-240	For Control Unit (RCU-016), 1.5 m
Connection Stand (23)	OP03-243	001-489-370	For MU-231 connection
Connection Stand (27)	OP03-244	001-489-420	For MU-270W connection
Hood (19) Assembly	OP26-24	001-139-370	MU-190 for RCN-319
Hood (23) Assembly	OP26-25	001-139-380-01	MU-190 for RCN-323
Dust Cover	03-193-7019	001-489-520	For RCN-319/323/327
Unit Mounting Base	OP24-51	001-461-600	For RCN-319/323/327
Cable Assembly	IOK-V0024-2	001-460-210	For LAN cable between RPU-025 and HUB-3000
Hub-Fan Kit	OP03-246	001-490-320	For RCN-319/323/327
Back Cover (19)	OP24-53	001-490-580	For RCN-319
Back Cover (23)	OP24-54	001-490-590	For RCN-323
Back Cover (27)	OP24-55	001-490-600	For RCN-327
Console Kit	RCN319N	-	
	RCN323/327N	-	
Bracket Assembly	OP26-5	000-016-270	For MU-190
	OP26-15	001-116-730	For MU-231
	OP26-30	001-439-060	For MU-270W
LAN Signal Converter	OP03-247-1	001-496-560	For RSB-133
	OP03-247-2	001-496-570	For RSB-129
	OP03-247-3	001-496-580	For RSB-128, magnetron radar
	OP03-247-4	001-568-890	For RSB-128, solid state radar

Name	Type	Code No.	Remarks
Cable Extension Kit	OP03-251-1	001-496-600	For RSB-133
	OP03-251-2	001-496-610	For RSB-129
	OP03-251-3	001-496-620	For RSB-128, magnetron radar
	OP03-251-4	001-568-950	For RSB-128, solid state radar
High Speed Kit	OP03-248	001-496-640	For S-band radar
PM Installation Kit	OP03-254-1	001-505-240	For RSB-133
	OP03-254-2	001-505-250	For RSB-129
	OP03-254-3	001-505-290	For RSB-128, magnetron radar
	OP03-254-4	001-568-860	For RSB-128, solid state radar
Retrofit Cable Kit	OP03-255-1	001-505-320	For RSB-129/133
	OP03-255-3	001-505-350	For RSB-128
Standard Cable Kit	OP03-256-1	001-508-020	For RSB-129/133
	OP03-256-3	001-508-030	For RSB-128
Console Replacement Kit	OP03-253-1	001-508-160	For FAR-2xx7 console, w/ AD-100
	OP03-253-2	001-508-170	For FAR-2xx7 console, no AD-100
RP Board Installation Kit	OP03-258-1	001-523-270	For software version 01.**
	OP03-258-4	001-546-980	For software version 50.**
Installation Materials	CP24-02900(10M)	001-208-050	LAN cable for HUB-3000
	CP24-02910(20M)	001-208-060	LAN cable for HUB-3000
	CP24-02920(30M)	001-208-070	LAN cable for HUB-3000
DVI-BNC Cable Kit	OP03-252	001-496-900	For connecting a VDR
Operator's Manual	OME-36520-*	000-193-878-**	English
	OMJ-36520-*	000-193-877-**	Japanese
Waveguide Tool	BSH-15279	001-461-510	For S-band, TR-DOWN radar
Waveguide Twist	RWA-1050 C-109	001-304-660	For X-band, TR-DOWN radar
Rectangular Guide Clamp	OP03-148	008-477-540	
FR-9 Termination	FR-9-00	001-102-740	
Waveguide Drain	03-009-0360	001-351-950	
H-type Waveguide Clamp	CP03-00600-W	008-198-420	
E-Bend Waveguide	RWA-1030 B-107	001-304-640	
Thru-deck Cable Gland	CP03-00702	008-197-350	For S-band, TR-DOWN radar
Cable Clamping Fixture	03-011-3228	001-074-670-10	
AC-DC Power Supply Unit	PR-850A	000-025-159	
Magnetron Replacement Instruction Manual	E32-01306-*	000-178-278-**	English, For FAR-2x18/2x28/2x38
	J32-01306-*	000-178-277-**	Japanese, For FAR-2x18/2x28/2x38
Wave Analyzer	WV-100	001-562-500	
	WV-100ST	001-562-510	w/ SEA-TRIAL mode
SSD Replacement Kit	OP03-263	001-576-900	
Operator's Manual (JP/EN)	OMC-36181-*	000-196-578-**	For Wave Analyzer

About the category sticker

This radar meets the requirements in IEC62388 (Marine navigation and radiocommunication equipment and systems-Shipborne radar-Performance requirements, method of testing and required test results). Check the appropriate box on the sticker which is pre-attached to the Processor Unit, according to your radar's specification. Refer to the following table to confirm your category. The radar category depends on the installed monitor.

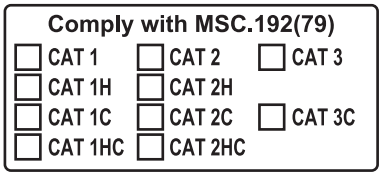

Sticker for category

Category	Radar type	ANT. rotation speed
CAT 1	FAR-2318, FAR-2328, FAR-2328W, FAR-2338S, FAR-2338SW, FAR-2338-NXT	24 rpm
CAT 1H	Same models as above	42 rpm
CAT 2	FAR-2218, FAR-2228, FAR-2238S, FAR-2238S-NXT	24 rpm
CAT 2H	Same models as above	42 rpm
CAT 3	FAR-2218, FAR-2228, FAR-2238S, FAR-2238S-NXT	24 rpm

For BB type, a monitor unit meeting the category requirements of IMO must be prepared by the user.

1. INSTALLATION

NOTICE

Do not apply paint, anti-corrosive sealant or contact spray to coating or plastic parts of the equipment.
Those items contain organic solvents that can damage coating and plastic parts, especially plastic connectors.

1.1 Antenna Unit (X-band Radar)

1.1.1 Installation Considerations

- The Antenna Unit is generally installed either on top of the wheelhouse or on the radar mast, on a suitable platform. Locate the Antenna Unit in an elevated position to permit maximum target visibility.
- A line of sight from the Antenna Unit to the bow of the ship must hit the surface of the sea in not more than 500 m or twice the ship's length, depending whichever value is smaller, for all load and trim conditions.

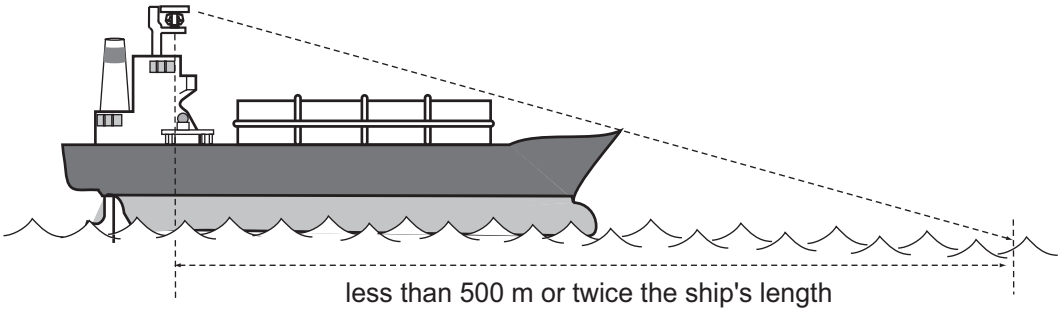

- Install the Antenna Unit so that any blind sectors caused by objects (mast, etc.) are kept to a minimum. A blind sector must not exist in arc of the horizon from right ahead to 22.5° aft of the beam to either side (see the figure below). Also, individual blind sectors of more than 5°, or the total arc of both blind sectors of more than 20°, must not occur in the remaining arc (Figure 2). Note that any two blind sectors separated by 3° or less are regarded as one sector.

Figure 1

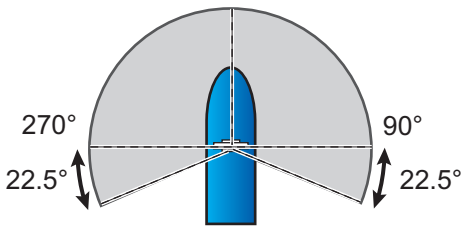

Figure 2

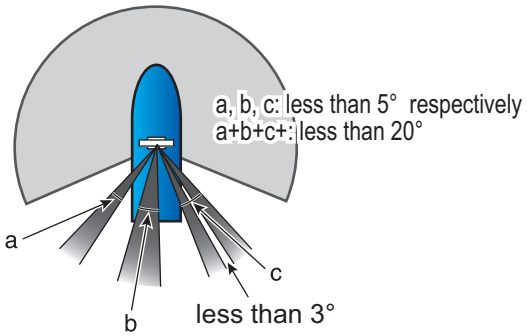

- Do not install the antenna where extreme winds may strike the port and starboard sides of the antenna.

- Install the Antenna Unit away from interfering high-power energy sources and TX radio antennas.
- Keep the lower edge of the Antenna Unit above the safety rail by at least 500 mm.
- Install two Antenna Units as shown in the figure below.

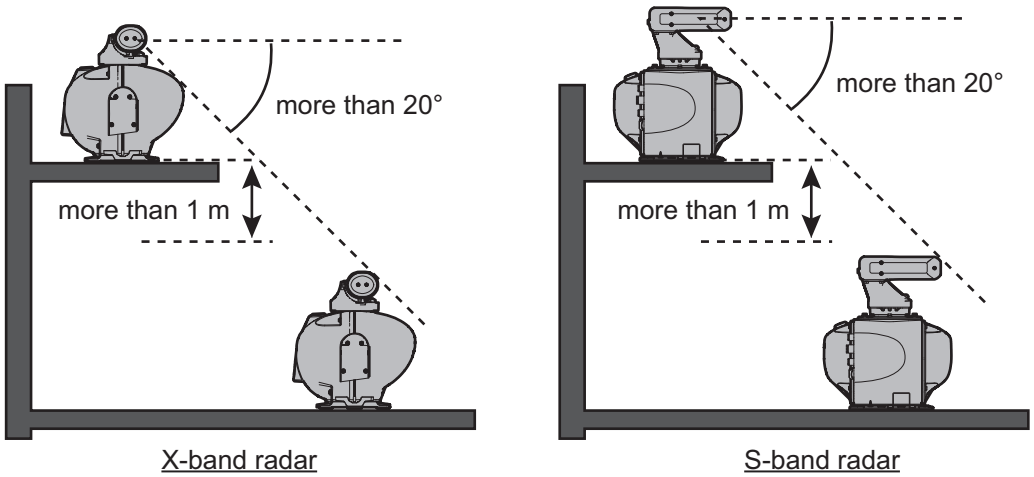

- No funnel, mast or derrick shall be within the vertical beamwidth of the Antenna Unit in the bow direction, especially zero degree ±5°, to prevent blind sectors and false echoes on the radar picture.
- It is rarely possible to place the Antenna Unit where a completely clear view in all directions is available. Therefore, determine the angular width and relative bearing of any shadow sectors for their influence on the radar at the first opportunity after fitting.
- Locate the antenna of an EPFS clear of the radar antenna to prevent interference to the EPFS. A separation of more than two meters is recommended.
- A magnetic compass will be affected if the Antenna Unit is placed too close to the compass. Observe the compass safe distances on page ii to prevent interference to a magnetic compass.
- Do not paint the radiator aperture, to ensure proper emission of the radar waves.
- Ground the unit with the ground wire (supplied).
- Deposits and fumes from a funnel or other exhaust vent can affect the aerial performance and hot gases may distort the radiator portion. Do not install the Antenna Unit where the temperature is more than 55 °C.
- Leave sufficient space around the unit for maintenance and servicing. See the Antenna Unit outline drawing for recommended maintenance space.
- For X-band radar, an antenna switch is provided on the chassis to stop the antenna. Make sure the mounting location provides easy access to the switch.

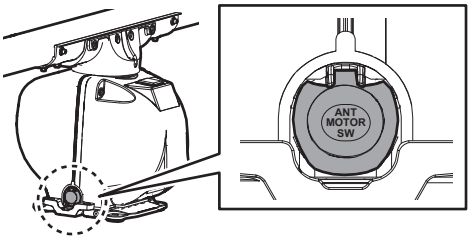

- For X-band radar, if it is necessary to lay down the radiator before you fasten it to the Antenna Unit, lay it down with the waveguide up, to prevent damage to the cylinder that surrounds the waveguide.

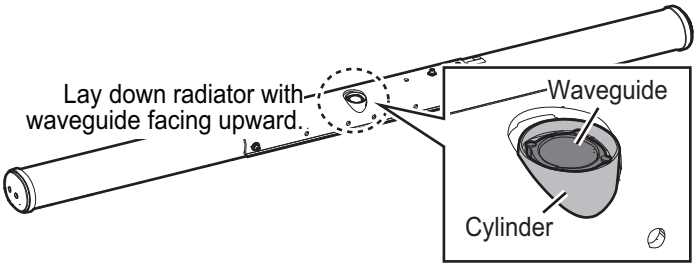

- If the de-icer is installed, a two-pole breaker (supplied locally) must also be installed.

Note: For more information, please refer to IMO SN/Circ.271 "Guidelines for the installation of shipborne radar equipment.

1.1.2 How to assemble the Antenna Unit (FAR-2x18/2x28/2x38)

The Antenna Unit consists of the antenna radiator and the Antenna Unit chassis, and they are packed separately. Fasten the antenna radiator to the Antenna Unit chassis as follows:

1. Coat the hatched area shown in the figure in step 2 with the supplied adhesive.
2. Remove the protective waveguide cap from the waveguide on the radiator bracket.

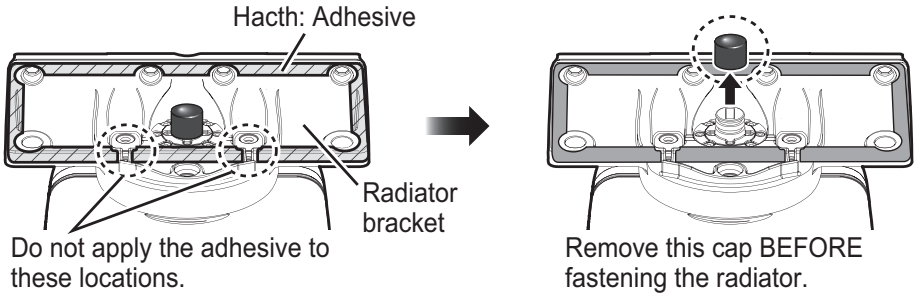

3. Pass the Gasket (03-182-3186, supplied) to six sets of the Antenna fixing bolts (03-182-4188, supplied, w/two flat washers), and then coat the threads of the Antenna fixing bolts with the supplied adhesive. Set the radiator on the radiator bracket.

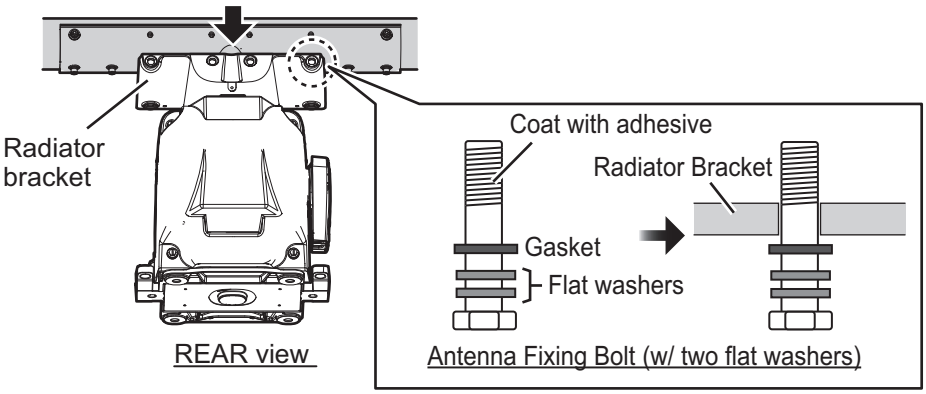

4. Fasten the antenna radiator to the radiator bracket with the six sets of Antenna fixing bolts. **Fasten the bolts in the order shown in the figure to the right**. The torque must be 15.0 N•m.

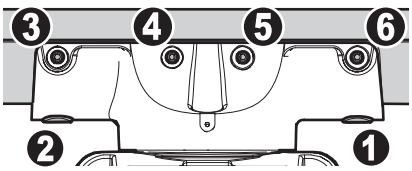

5. Coat the Antenna fixing bolts fixed at step 4 with the supplied adhesive as shown in the right figure.

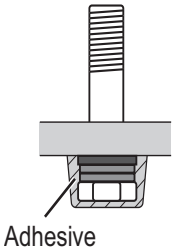

1.1.3 How to assemble the Antenna Unit (FAR-2x58)

The Antenna Unit consists of the antenna radiator and the Antenna Unit chassis, and they are packed separately. Fasten the antenna radiator to the Antenna Unit chassis as follows:

1. Attach the supplied two guide pins to the underside of the antenna radiator.
2. Remove the protective waveguide cap from the waveguide on the radiator bracket.
3. Coat the grayed area shown below with the supplied adhesive.

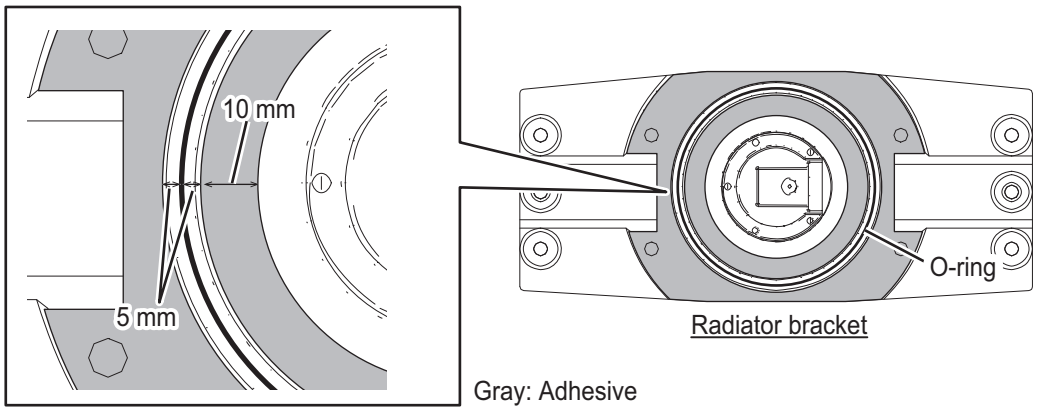

4. Grease the O-ring and set it to the O-ring groove of the radiator flange.
5. Set the supplied spring washers and flat washers then coat the adhesive to the threads of the supplied hex. bolts M8×40.
6. Set the antenna radiator to the radiator bracket.

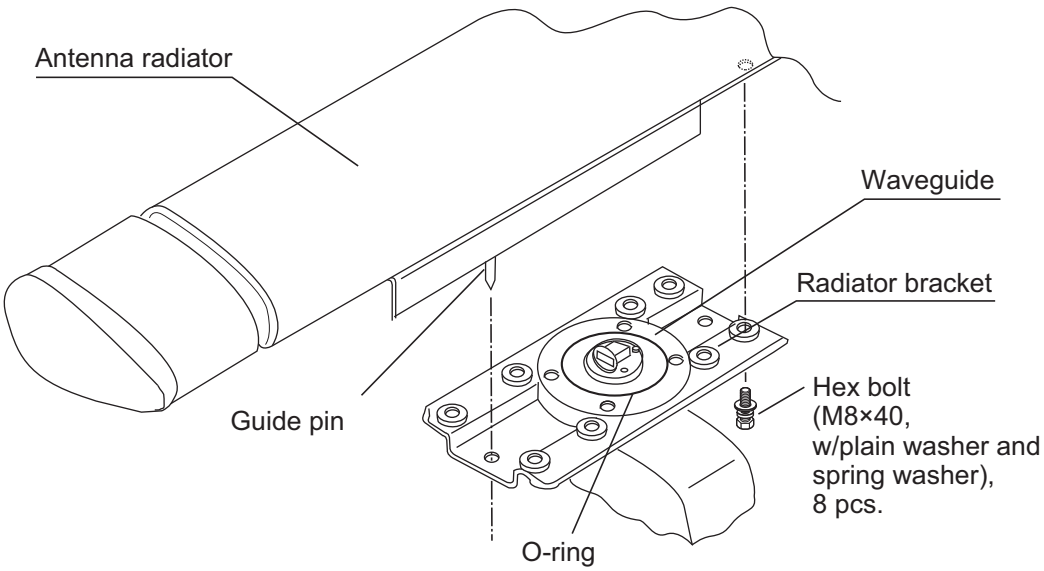

7. Remove the two guide pins (inserted at step 1), and then tighten fixing bolts. The torque must be 15 N•m.

> **⚠ CAUTION**
>
> **Be sure to remove the guide pins.**
>
> Injury may result if the guide pins loosen and fall.

8. Coat hex bolts M8×40 with the supplied adhesive and use them to loosely fasten the antenna radiator to the Antenna Unit chassis.

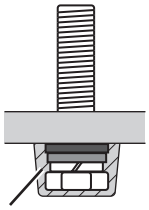

1.1.4 How to hoist the Antenna Unit (FAR-2x18/2x28/2x38)

The Antenna Unit may be assembled before hoisting it to the mounting platform. Attach lifting belt slings to the “Radiator Bracket”, NOT the antenna radiator, as shown in the figure below.

Also, hoist the Antenna Unit slowly. Hoisting swiftly may cause a damage to the antenna radiator or damage the radiator chassis.

There are two methods to hoist the Antenna Unit.

Method 1

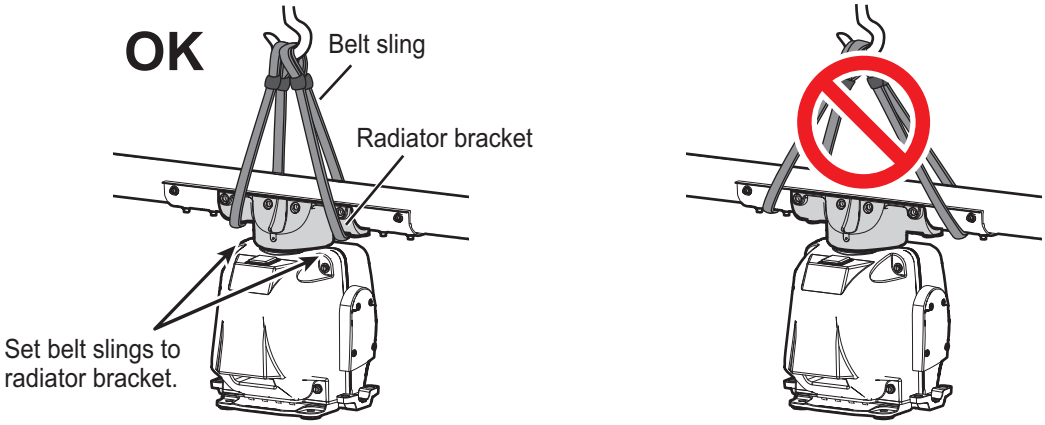

Method 2

Fasten belt sling to a shackle, pass belt sling around radiator bracket and fasten other end of belt sling to other shackle.

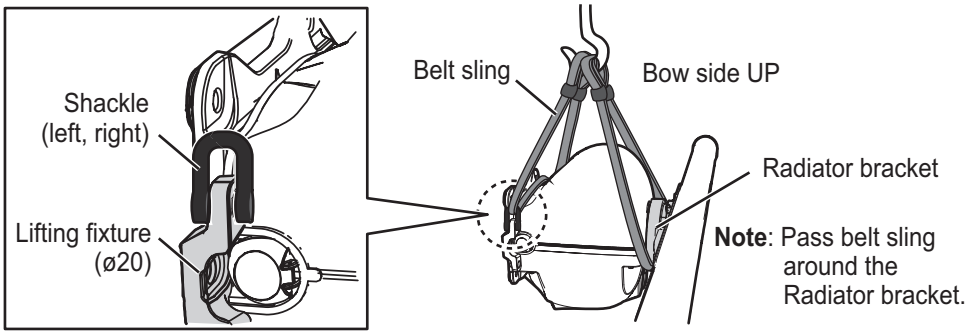

1.1.5 How to hoist the Antenna Unit (FAR-2x58)

The Antenna Unit may be assembled before hoisting it to the mounting platform. Do one of the following to hoist the Antenna Unit. Attach shackles (ϕ20, local supply) to the lifting fixtures to use belt slings. After the Antenna Unit is securely placed, remove the shackles.

Also, hoist the Antenna Unit slowly. Hoisting swiftly may cause a damage to the antenna radiator or damage the radiator chassis.

Method 1

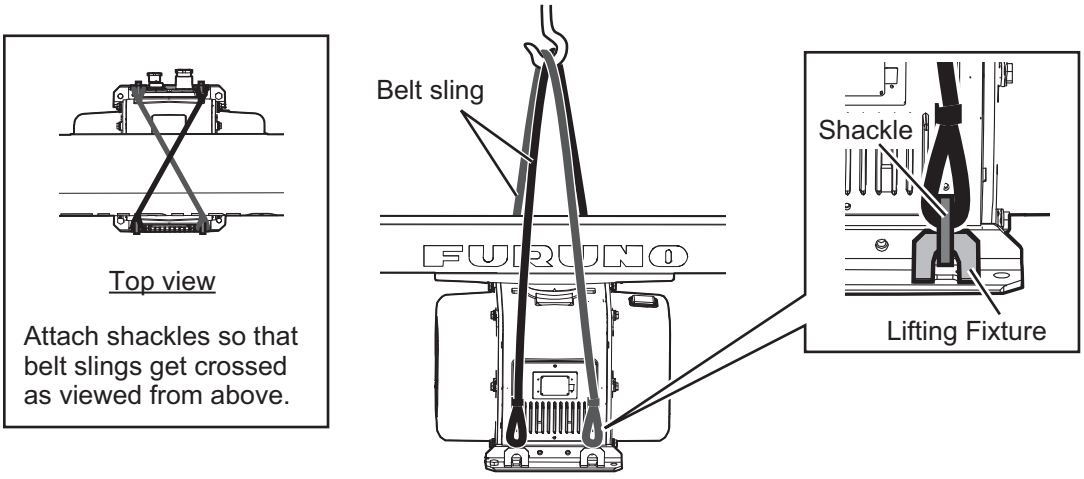

Note: Do not hoist the Antenna Unit by hanging belt slings around the radiator directly.

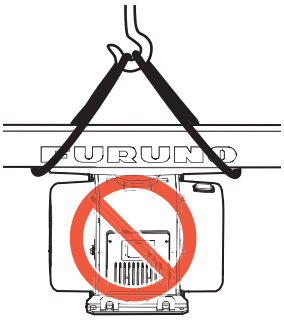

Method 2

Fasten one belt sling to both shackles, and pass the other belt sling around the stern side of the radiator.

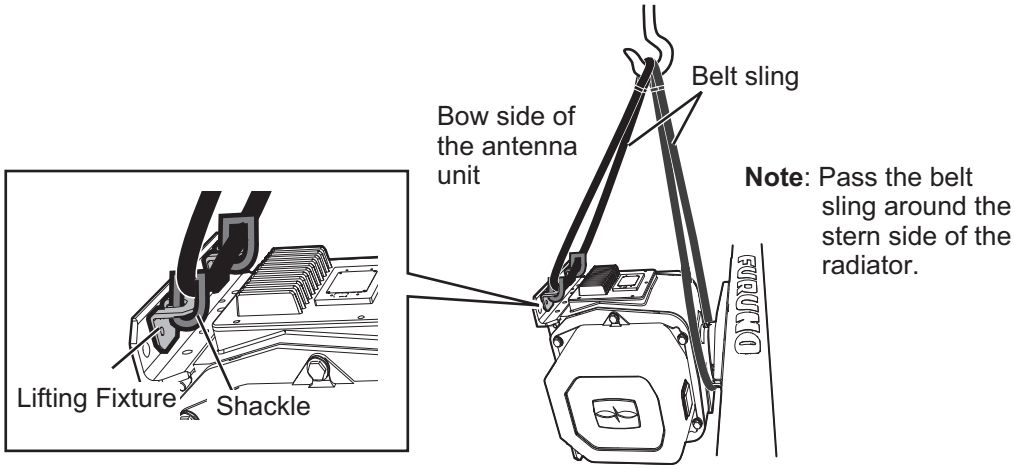

1.1.6 How to fasten the Antenna Unit to the mounting platform (FAR-2x18/2x28/2x38)

1. Construct a suitable mounting platform referring to the outline drawing at the end of this manual.
   Note: The mounting platform must be flat, level and firmly secured.
   - The diameter of the mast for fixing the Antenna Unit platform must be over 180 mm.
   - The thickness of the Antenna Unit platform must be over 12 mm.
   - The reinforcement rib must be installed diagonally.

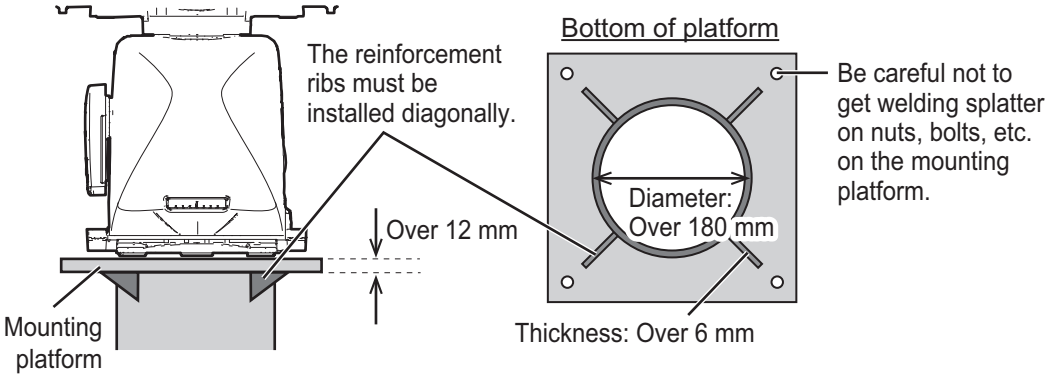

2. Referring to the outline drawing at the back of this manual, drill four mounting holes (ϕ15 mm) in the mounting platform.
3. Place the Antenna Unit on the platform, then orient the unit so the bow mark on its base is facing the ship's bow.
   Note: When the Antenna Unit is placed on the platform, make sure that the platform is not inclined.

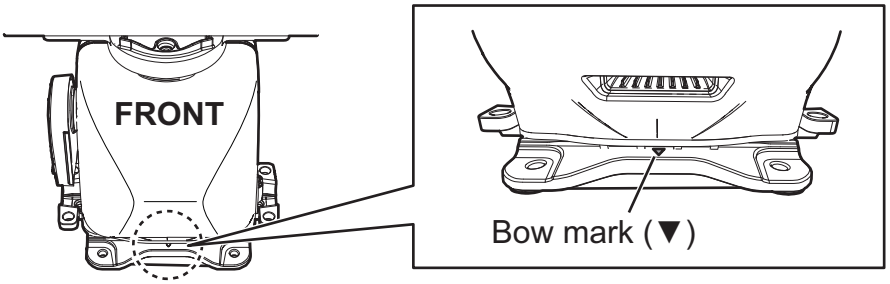

4. Insert four sets of hex bolts (M12×70) attached the seal washers to the mounting holes of the antenna chassis. Lift the antenna chassis slightly then insert the bolts attached the insulation sheets.
   Note: DO NOT insert the bolts from the underside of the platform. The cover cannot be opened.

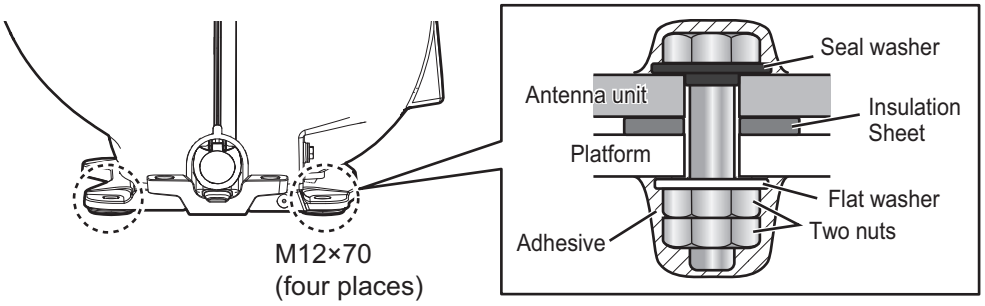

5. Adjust the direction of the Antenna Unit so the bow mark on its base is facing the ship's bow.
6. Fasten the Antenna Unit to the mounting platform with four sets of hex bolts (M12×70), nuts, flat washers and seal washers. Insert the bolts from the topside of the platform. The torque must be 49 N•m. For how to fasten double nuts, see the following procedure.

How to fasten double nuts

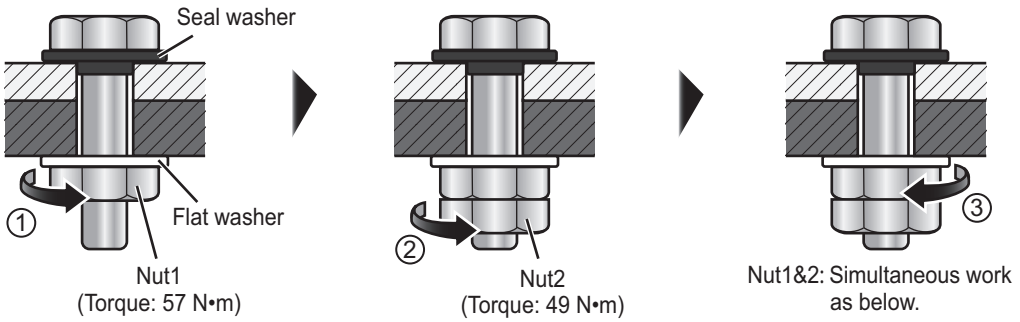

Note: Fasten the double nuts as shown in the figure to the right. Use spanners with a length of approx. 200 mm.

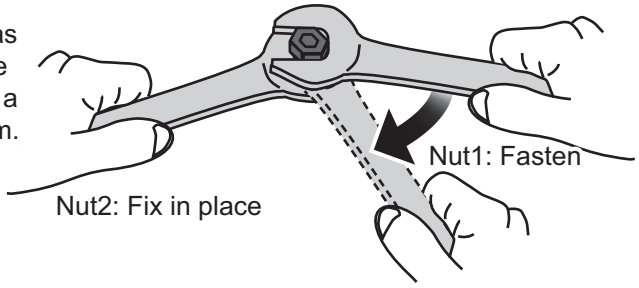

7. Using a hex bolt (M6×25), nut (M6) and flat washer (M6), establish the ground system on the mounting platform. The location must be within 340 mm of the ground terminal on the Antenna Unit. Connect the ground wire (RW-4747, 340 mm, supplied) between the grounding point and ground terminal on the Antenna Unit. Coat the hardware of the ground system with the supplied adhesive.

Antenna chassis side

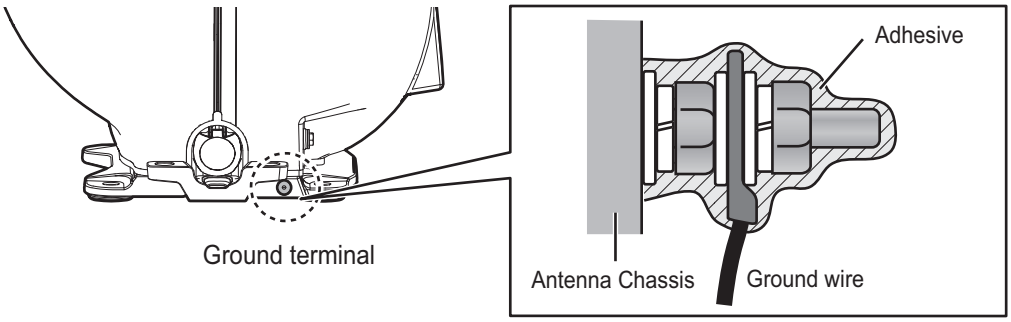

Mounting platform side

Arrange a ground terminal as close as possible to Antenna Unit. There are two methods to connect the ground wire for mounting platform side.

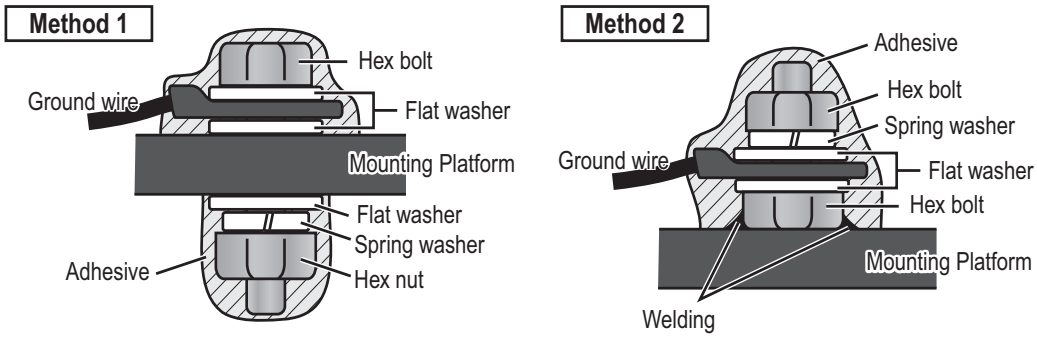

1.1.7 How to fasten the Antenna Unit to the mounting platform (FAR-2x58)

1. Construct a suitable mounting platform referring to the outline drawing at the end of this manual.
   Note: The mounting platform must be flat, level and firmly secured.
2. Lay the rubber mats (supplied) on the mounting platform.

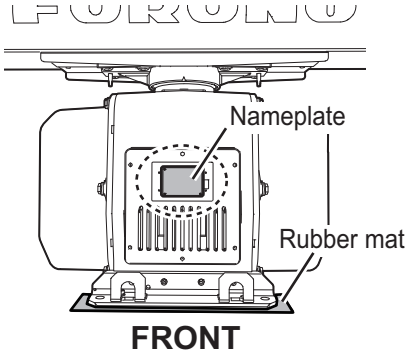

3.Place the Antenna Unit on the supplied rubber mats, then orient the unit so the nameplate on the scanner box is facing the ship's bow.
Note: When the Antenna Unit is placed on the platform, make sure that the platform is not inclined.

4.Insert four sets of hex bolts (M12×60) attached the seal washers to the mounting holes of the antenna chassis.

5. Adjust the direction of the Antenna Unit so the nameplate is facing the ship's bow.
6. Fasten the Antenna Unit to the mounting platform with four sets of hex bolts, nuts, flat washers and seal washers. The torque must be 49 N•m.

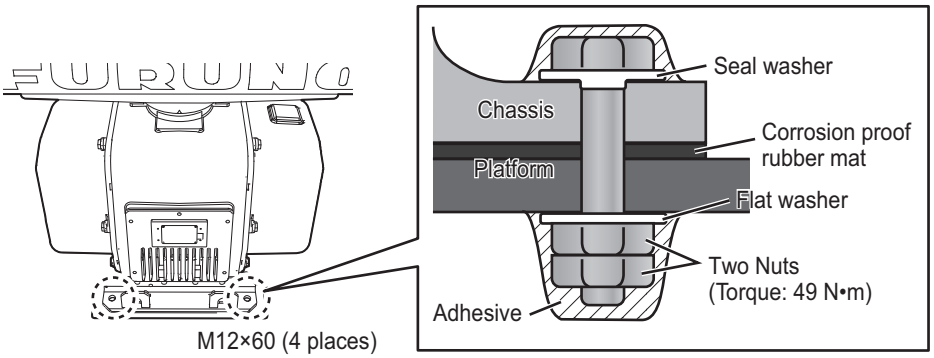

Note: For how to fasten the double nuts, "How to fasten double nuts" on page 1-8.

7. Using a hex bolt (M6×25), nut (M6) and flat washer (M6), establish the ground system on the mounting platform. The location must be within 340 mm of the ground

terminal on the Antenna Unit. Connect the ground wire (RW-4747, 340 mm, supplied) between the grounding point and ground terminal on the Antenna Unit. Coat the hardware of the ground system with the supplied adhesive.

Antenna chassis side

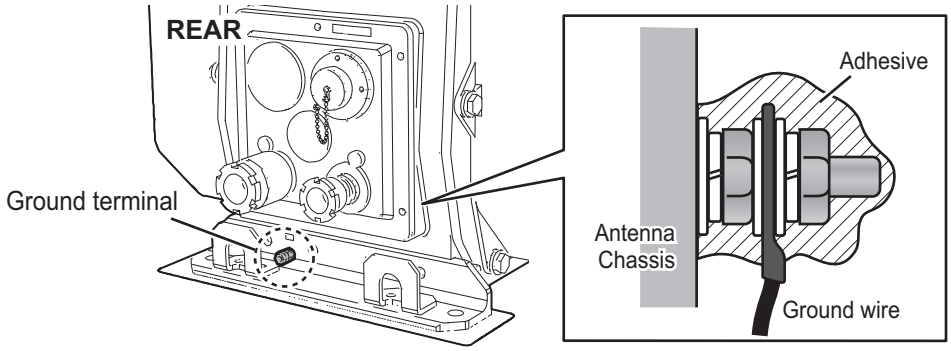

Mounting platform side

Arrange a ground terminal as close as possible to Antenna Unit. There are two methods to connect the ground wire for mounting platform side.

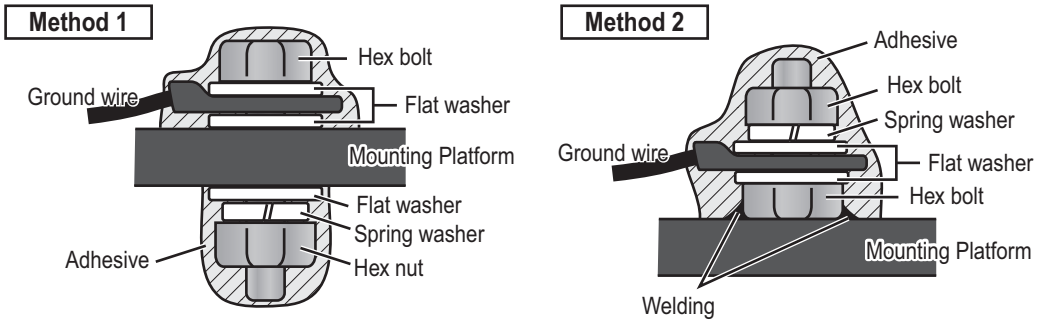

1.2 Antenna Unit (S-band Radar)

For installation considerations regarding the Antenna Unit, see section 1.1.1.

1.2.1 Installation precaution for S-band Antenna Unit

Due to the S-band radiator length, there may be excessive stress placed on the radiator caused by vibrations, rolling and general ship movement. To prevent damage to the Antenna Unit and radiator, do not install the antenna near the end of a platform. If there is no other location available, reinforce the platform before installing the Antenna Unit.

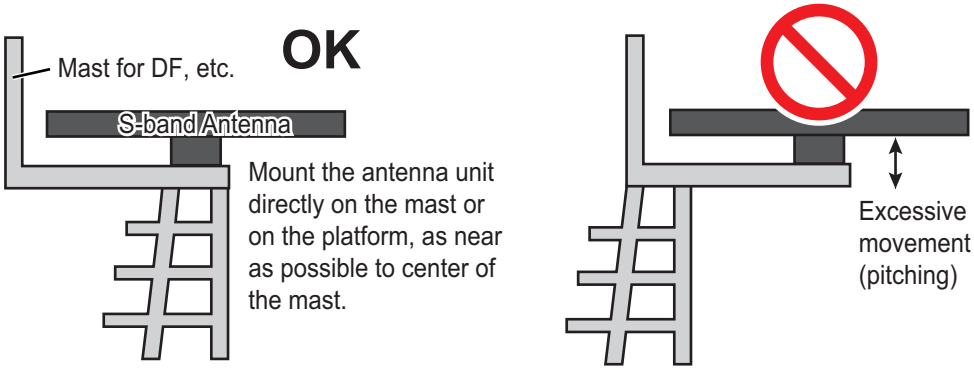

1.2.2 How to assemble the Antenna Unit

The Antenna Unit consists of the antenna radiator (w/antenna support) and the antenna unit chassis, and they are packed separately. Fasten the antenna radiator to the Antenna Unit chassis as follows:

1. Remove the protective waveguide cap from the waveguide on the radiator bracket.

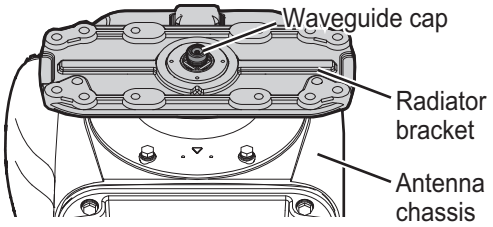

2. Set the radiator on the radiator bracket (w/antenna support) so the guide pins of the antenna support fit into the guide pin holes on the radiator bracket. (Orient the logo of the radiator to the side with bow mark on the bracket. If reversely oriented, the radiator cannot be set to the bracket.)

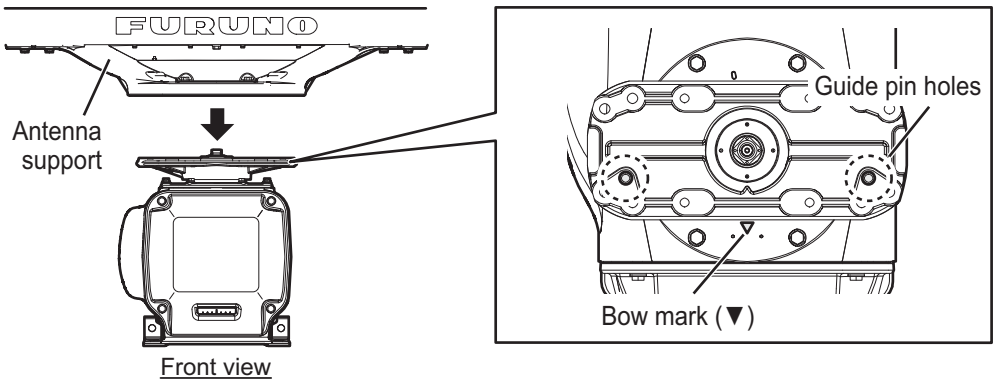

3. Coat the threads of eight hex bolts (M12×50, supplied) with the supplied adhesive.
4. Fasten the antenna radiator to the radiator bracket from the bottom of the bracket with the eight hex bolts, spring washers and flat washers. The torque must be 49 N•m.

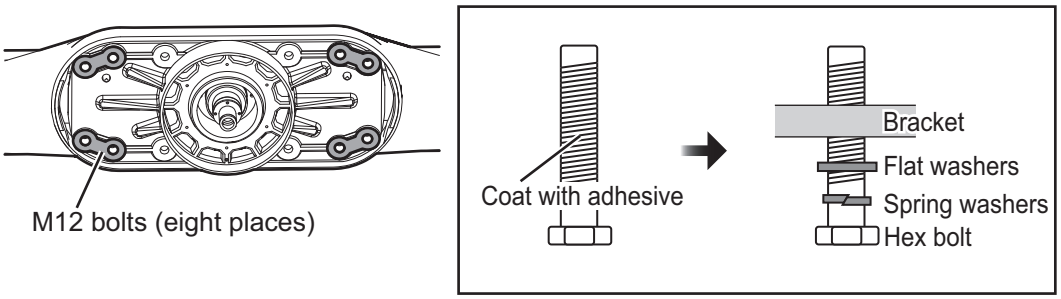

5. Coat the bolt heads fastened at step 4 with the supplied adhesive as shown in the figure to the right.

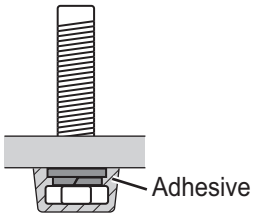

6. Connect the coaxial cable from the Antenna Unit to the rotary joint. The torque must be 25 N•m.

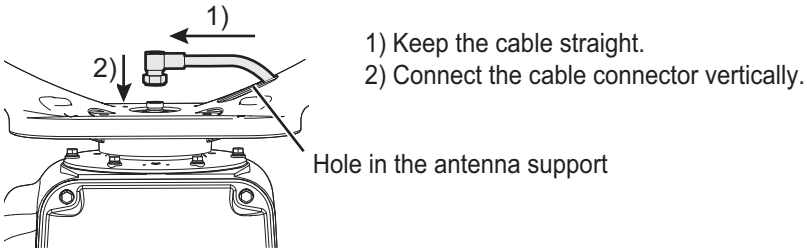

Note 1: The coaxial cable connector must be connected vertically.

Note 2: The coaxial cable must be horizontal and must not contact the antenna support hole.

Note 3: If the coaxial cable is long, bend the cable some distance from the connector. Insert surplus cable into antenna support. Connect the cable to the rotary joint, taking care that the threads of the cable and rotary joint are aligned.

7. Coat the hex bolts (M12×40, 4 pcs.) for the support cover with the supplied adhesive).

8. Fasten the support cover with the hex bolts, spring washers and flat washers. The torque must be 20 N•m.

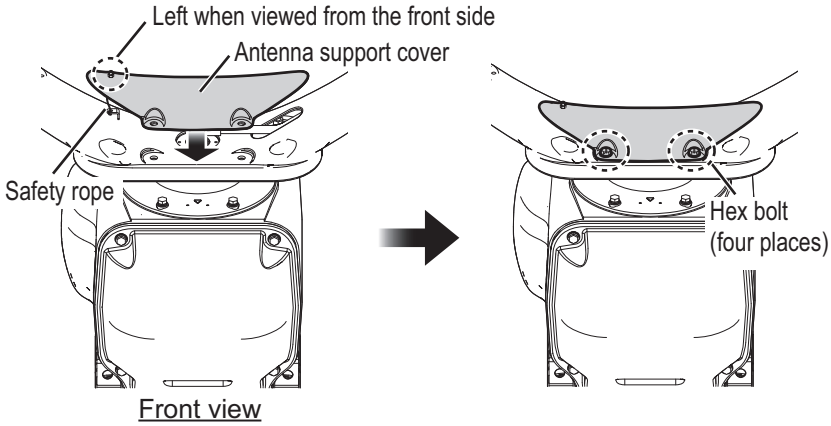

Note 1: Make sure the safety rope does not contact the antenna support cover.

Note 2: Set the screw for the safety rope to come to the left when viewed from the front side of the antenna.

1.2.3 How to hoist the Antenna Unit

The Antenna Unit may be assembled before hoisting it to the mounting platform. Attach lifting belt slings to the “Antenna Support”, NOT the antenna radiator, as shown in the figure below.

Also, hoist the Antenna Unit slowly. Hoisting swiftly may cause a damage to the antenna radiator or damage the radiator chassis.

There are two methods to hoist the Antenna Unit.

Method 1

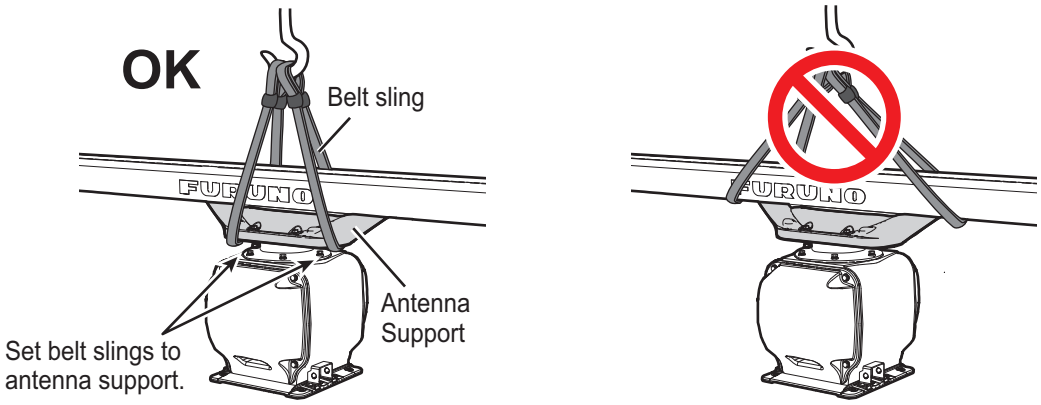

Method 2

Fasten the belt sling to a shackle, pass the belt sling around the antenna support and fasten the other end of the belt sling to the other shackle.

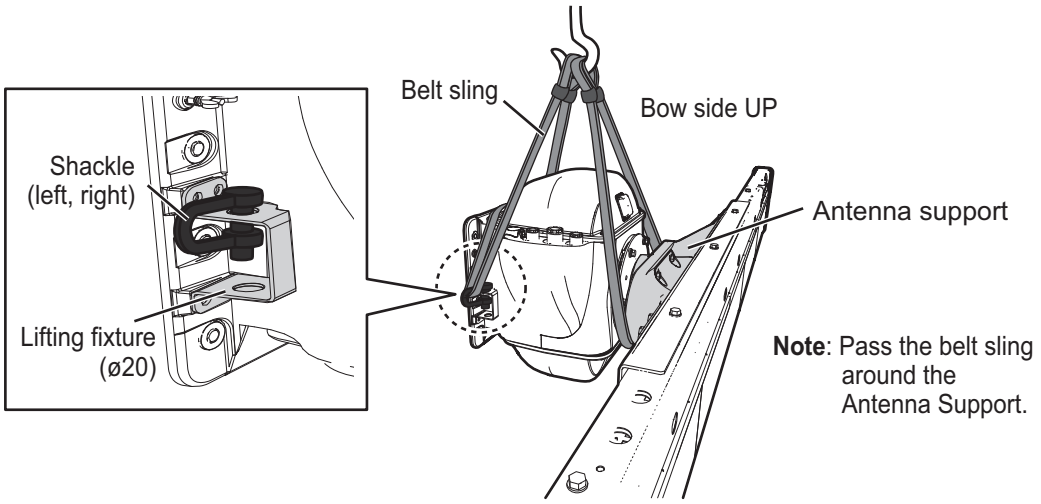

1.2.4 How to fasten the Antenna Unit to the mounting platform

1. Construct a suitable mounting platform referring to the outline drawing at the back of this manual.

   Note: The mounting platform must be flat, level and firmly secured.

   - The diameter of the mast for fixing the Antenna Unit platform must be over 250 mm.
   - The thickness of the Antenna Unit platform must be over 15 mm.
   - The reinforcement ribs must be installed diagonally shown in the following figure.

2. Referring to the outline drawing, drill four mounting holes (ϕ16 mm) in the mounting platform.

3. Place the Antenna Unit on the mounting platform, then orient the unit so the bow mark on its base is facing the ship's bow.

   Note: When the Antenna Unit is placed on the platform, make sure that the platform is not inclined.

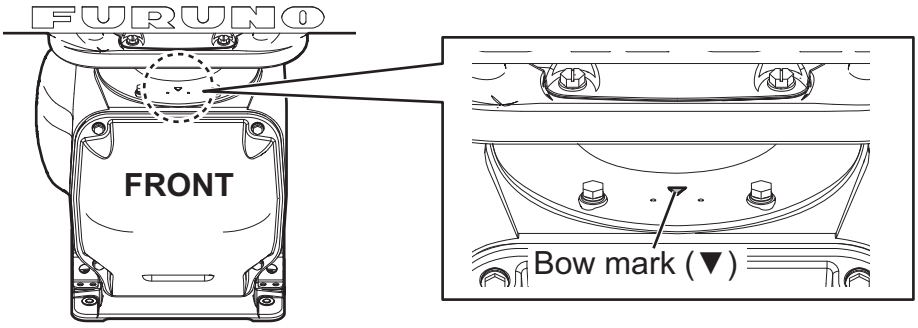

4. Fasten the Antenna Unit to the mounting platform with M12×70 hex bolts, nuts, flat washers, spring washers and seal washers (supplied). The torque must be 49 N•m. Fasten the double nuts, referring to "How to fasten double nuts" on page 1-8.

   Note: The bolts can also be inserted from the underside of the platform.

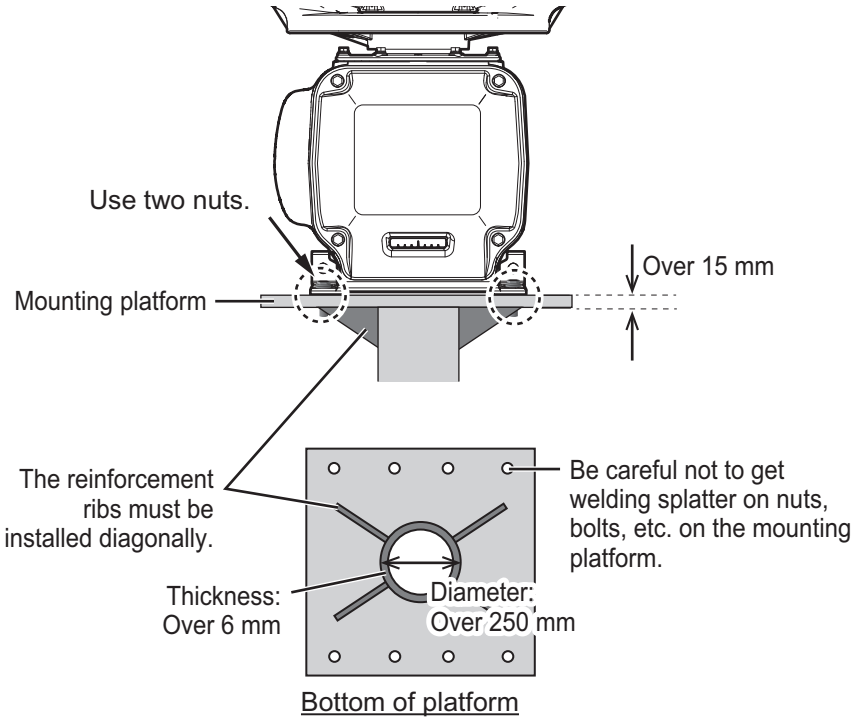

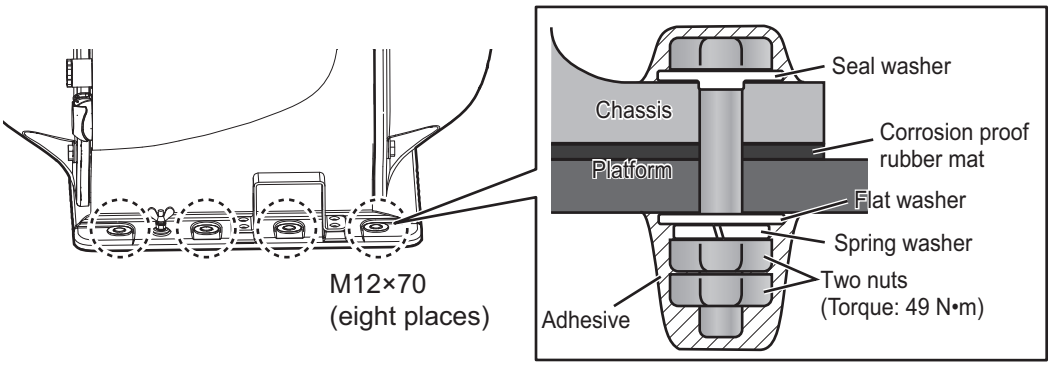

5. Using a hex bolt (M6×25), nut (M6), spring washer (M6) and flat washer (M6), establish the ground system on the mounting platform as shown in the following figure. The location must be within 340 mm of the ground terminal on the Antenna Unit. Connect the ground wire (RW-4747, 340 mm, supplied) between the grounding point and ground terminal on the Antenna Unit. Coat the hardware of the ground system with the supplied adhesive.

Antenna chassis side

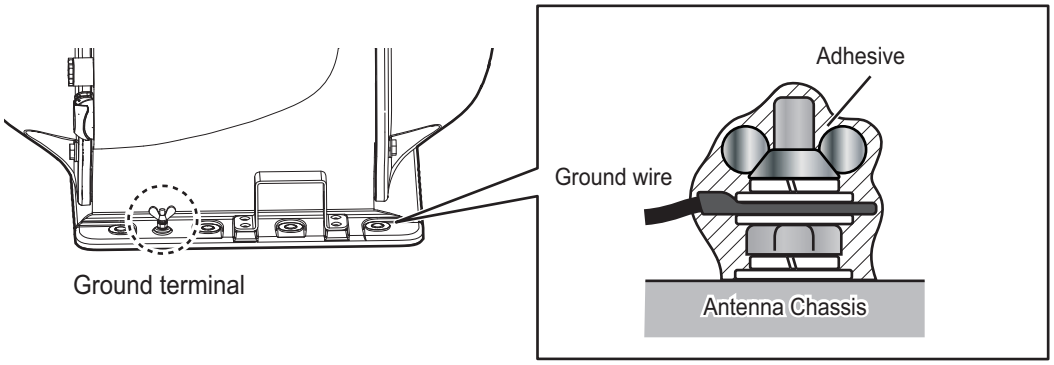

Mounting platform side

Arrange ground terminal as close as possible to Antenna Unit. There are two methods to connect ground wire for mounting platform side.

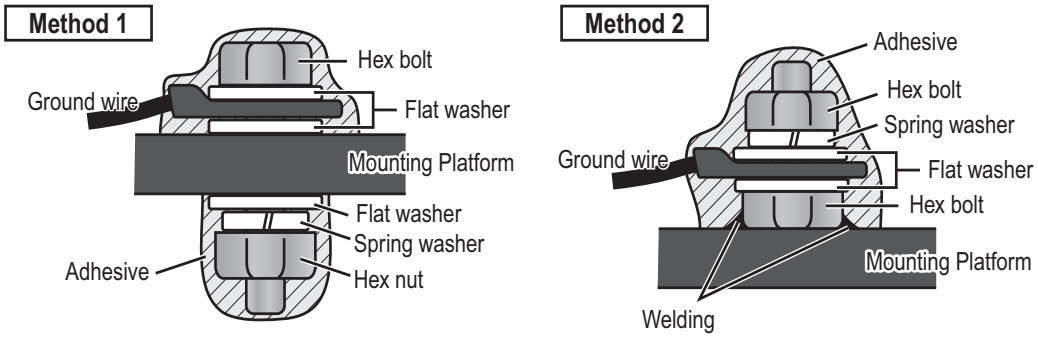

1.3 Monitor Unit

See the operator's manual for MU-190 (OMC-44670), MU-231 (OMC-44690) or MU-270W (OMC-44930) for the installation procedure. Keep in mind the following points when selecting a location.

- Locate the monitor unit where no framing is installed immediately in front of the monitor.
- Locate the monitor where the display is easily visible in all ambient lighting conditions.

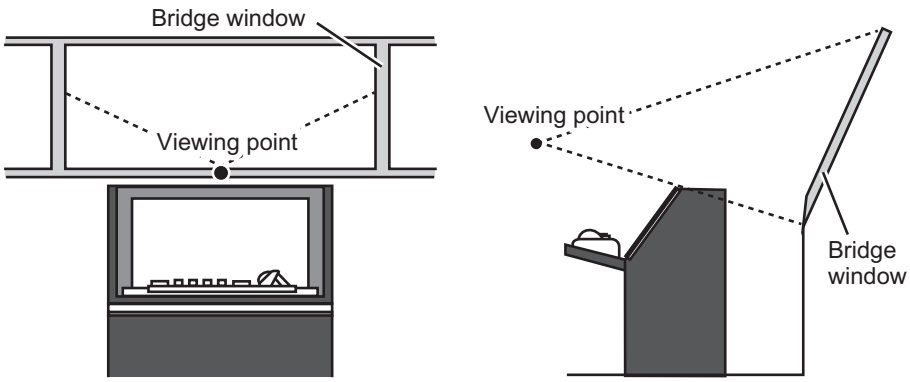

1.4 Control Unit

The Control Units can be installed on a desktop or flush mounted in a console.

Installation considerations

Keep in mind the following points when selecting a location.

- Select a location where the Control Unit can be operated easily.
- Locate the unit away from heat sources because of heat that can build up inside the cabinet.
- Locate the equipment away from places subject to water splash and rain.
- Leave sufficient space at the sides and rear of the unit to facilitate maintenance.
- Determine the location considering the length of the signal cable between the Control Unit and the Processor Unit.
- A magnetic compass will be affected if the Control Unit is placed too close to the magnetic compass. Observe the compass safe distances in the SAFETY INSTRUCTIONS to prevent interference to the compass.

1.4.1 Desktop installation

For desktop installation, the unit can be laid flat or tilted.

How to mount the unit tilted

<RCU-014/015/016>

1. Fit the KB fixing plate (in FP03-09850 for RCU-014, in FP03-09860 for RCU-015/016) to the bottom of the Control Unit.

2. Attach the rubber foots (three for RCU-014, two for RCU-015/016) to the bottom of the Control Unit as shown in the following figure.
3. Install the Control Unit at the desired location with self-tapping screws (local supply).

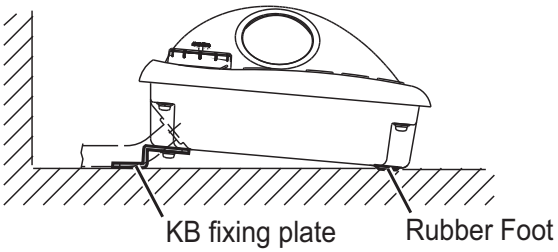

Side view of Control Units

<RCU-031>

The Control Unit can be mounted with the KB fixture, which mounts the unit at an angle.

1. Drill four pilot holes in the mounting location for mounting screws, referring to the outline drawing at the back of this manual.
2. Secure the KB fixture (supplied) to the mounting location, using four self tapping screws (ϕ5×20, supplied).
   Note: Secure the KB fixture so that the cutout is located on the top side.

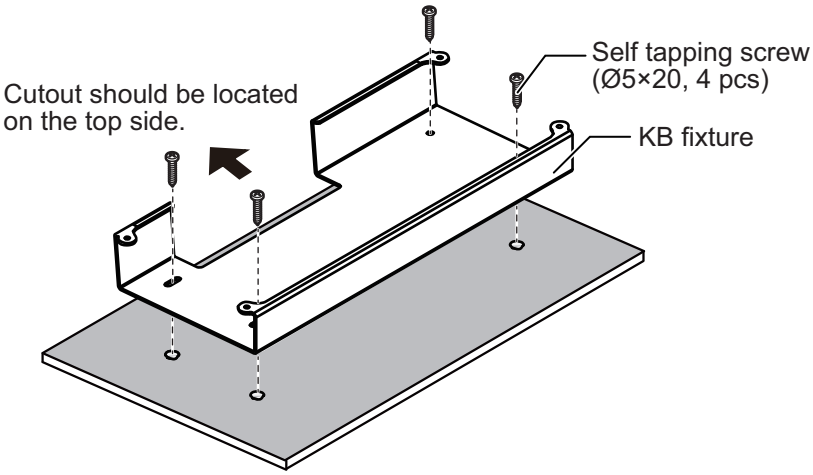

3. Attach a ground wire (IV-1.25sq, supplied locally) to the ground terminal at the bottom of the unit.

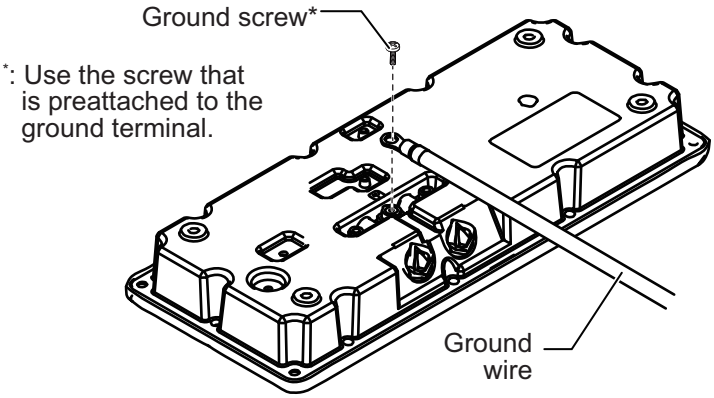

4. Secure the Control Unit the KB fixture, using four binding screws (M5×20, supplied).

5. Attach four bolt hole caps (supplied).

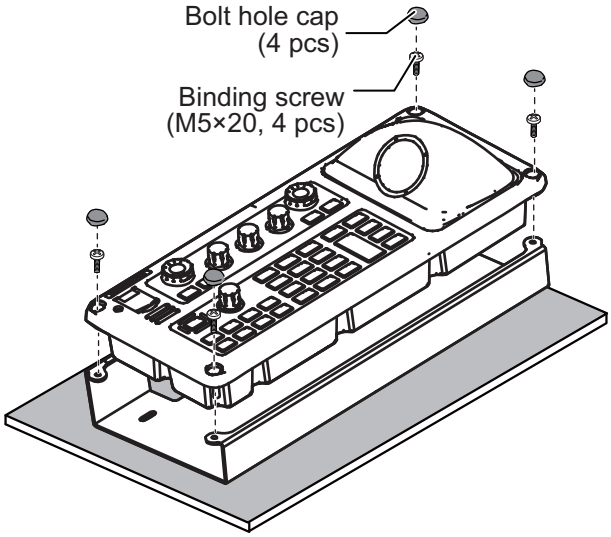

How to mount the unit flush with mounting surface

<RCU-014/015/016>

1. Drill four mounting holes of 5 mm diameter referring to the outline drawing at the back of this manual.
2. Fix the Control Unit with four screws (M4) from the underside of the desktop. (The M4 screws with a sufficient length for the thickness of the desktop should be provided locally.)

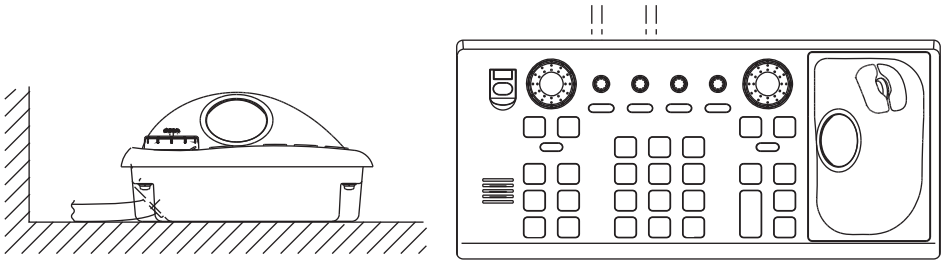

Control Unit RCU-014

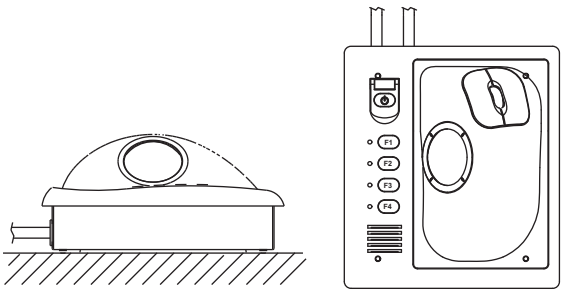

Control Unit RCU-015/RCU-016

<RCU-031>

1. Drill four pilot holes in the mounting location for stud bolts (M4×50), referring to the outline drawing at the back of this manual.
2. Attach a ground wire (IV-1.25sq, supplied locally) to the ground terminal at the bottom of the unit.
3. Insert four stud bolts (M4×20, supplied) to the bolt holes at the bottom of the unit.
   Note: Insert the stud bolts manually. If you insert the stud bolts using a tool, the unit may be damaged.

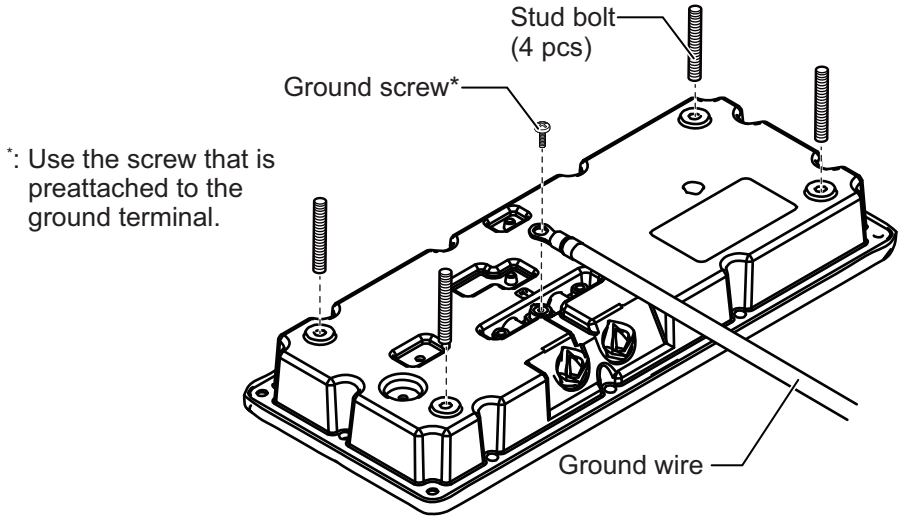

4. Set the unit to the mounting location so that the stud bolts on the bottom of the unit are inserted to the pilot holes.
5. Fasten the four wing nuts (supplied) to the stud bolts from the rear side of the mounting surface.

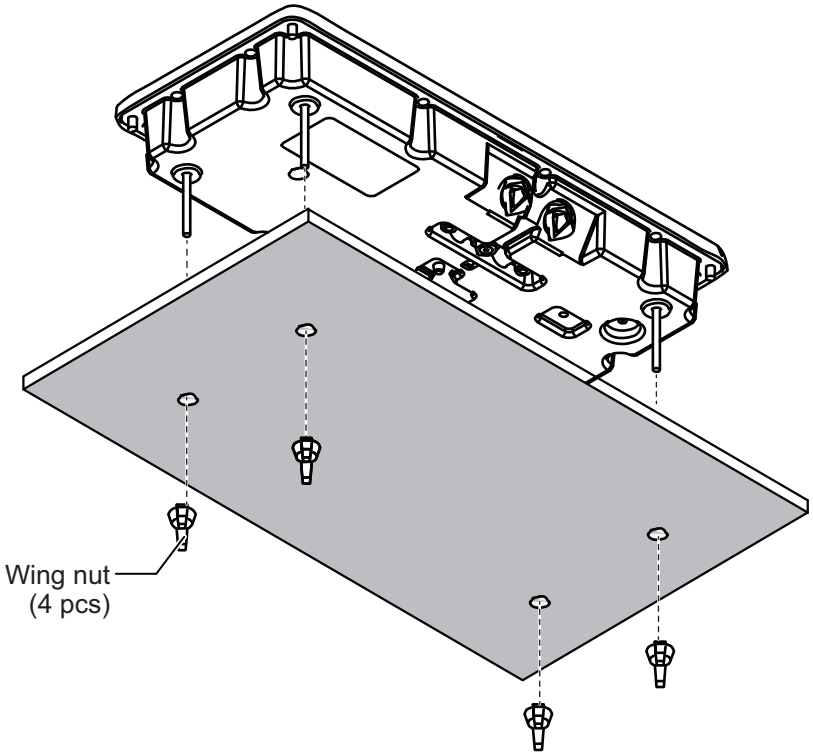

1.4.2 Flush mount Installation

Note: For flush mounting in a panel, the mounting surface must be flat. Do not install the unit on an uneven surface.

Flush mount, fixed at rear (for RCU-014/015/016)

Use the optional flush mount kit FP03-09870 to mount the Control Unit to a console panel. See the outline drawing at the back of this manual.

1. Prepare a cutout in the location as shown in the figure as below.

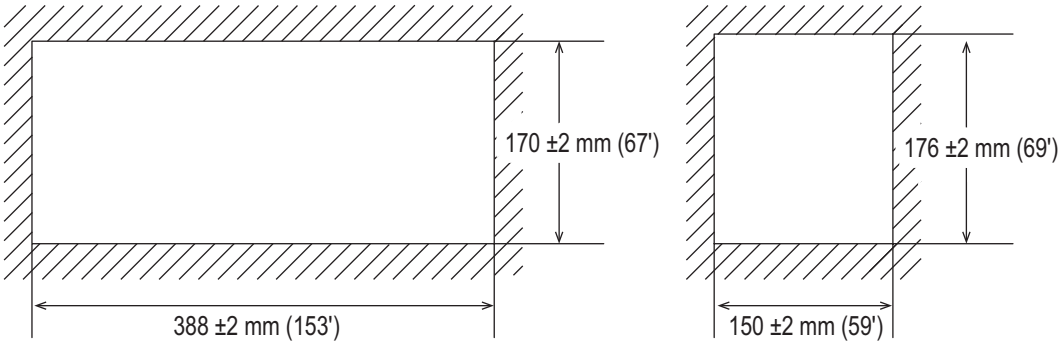

RCU-014 RCU-015/016

2. Set the Control Unit to the cutout.
3. Attach the flush mount fixtures to the Control Unit with four screws from the rear side.
4. Screw the wing screw to each mounting plate and then insert hex. bolt to each wing screw.
5. Fasten each wing screw and then fasten the hex. nuts as shown in figure below.

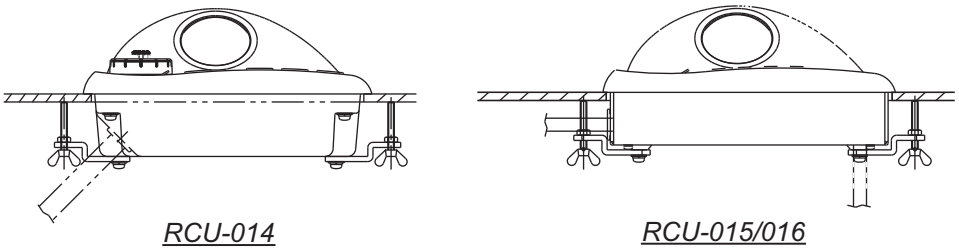

RCU-014 RCU-015/016

Side view of Control Units

Flush mount, using with panel (for RCU-014 only)

Use the optional flush mount kit OP03-245 to mount the control unit to a console panel using with the panel. See the mounting procedure in the kit for details.

Flush mount, fixed at front (for RCU-031)

Note: For flush mounting, select a location where the surface is flat.

1. Make a mounting hole and drill four pilot holes in the mounting location, referring to the outline drawing at the back of this manual.
2. Attach a ground wire (IV-1.25sq, supplied locally) to the ground terminal at the bottom of the unit.

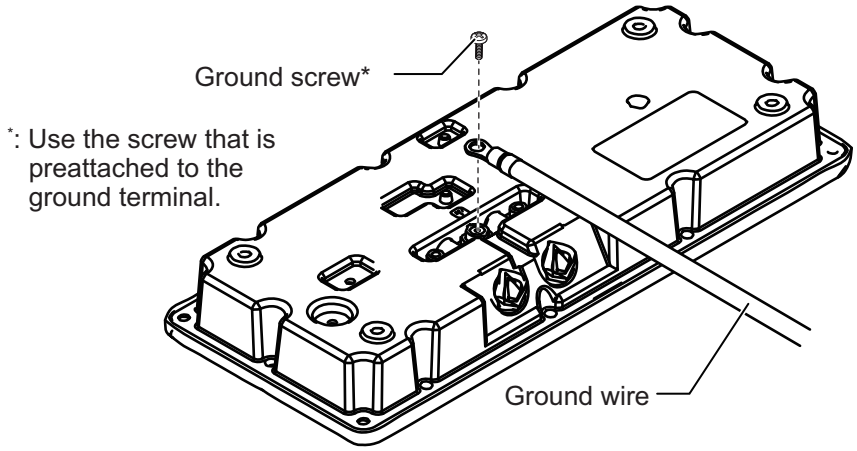

3. Set the unit to the mounting hole, then secure the unit with four self-tapping screws (ϕ5×20, supplied).
4. Attach four bolt hole caps (supplied).

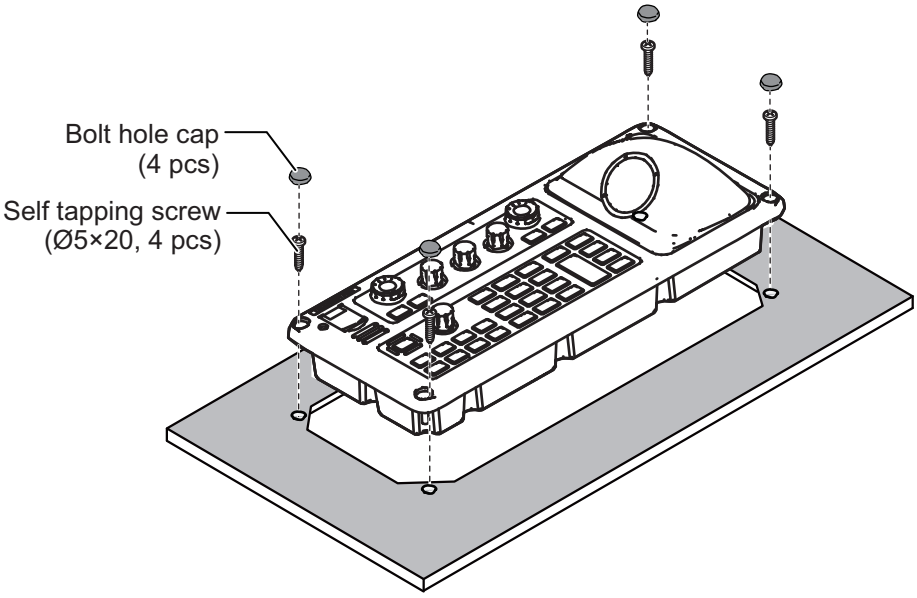

1.4.3 Installation of RCU-016 connected with RCU-014

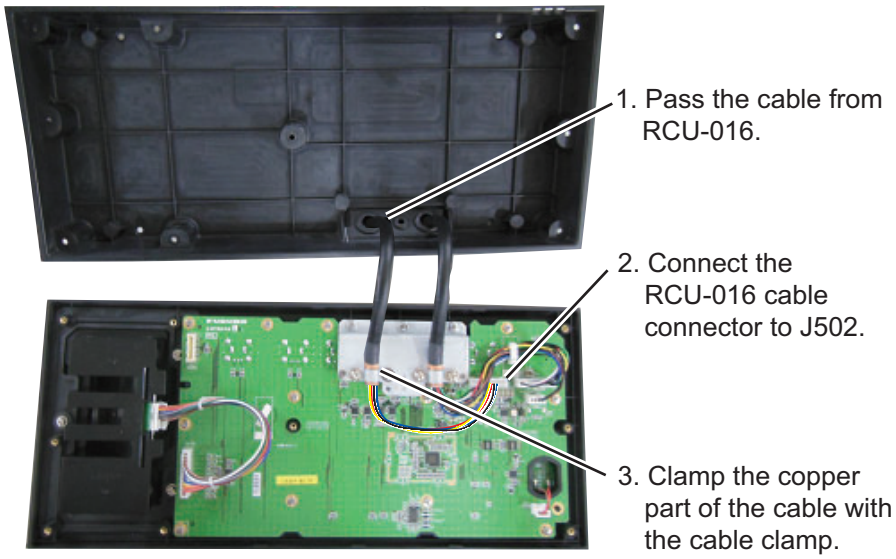

1.4.4 How to change the cable entry of RCU-015/016

To change the cable entry from the side (default) to the bottom, modify the unit as shown in the following procedure.

1. Turn the chassis upside-down and remove four screws (M3×8) to open the back cover.
2. Remove the cable clamp, then remove the cable.

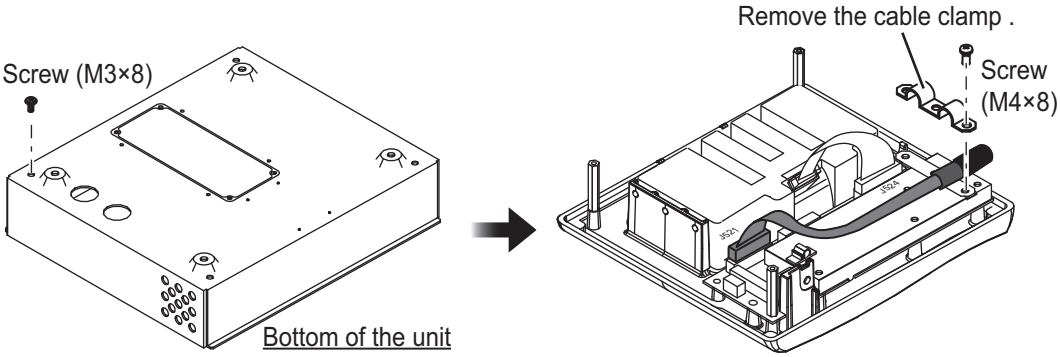

3. Pass the cable through the hole in the figure shown in the figure to the right, then clamp the copper part of the cable with the cable clamp removed at step 1.
   Note: If the RCU-016 is connected in series with RCU-015, connect J522 instead of J521.
4. Close the back cover of RCU-016.

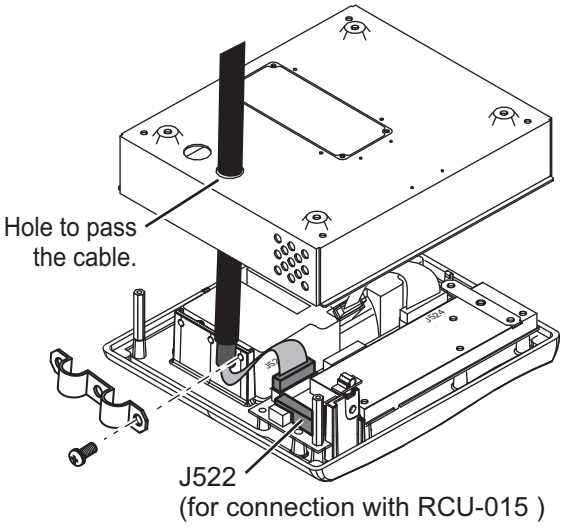

1.5 Power Supply Unit

This unit can be installed on a bulkhead, wall or on the floor.

1.5.1 Installation considerations

Keep in mind the following points when selecting a location.

- Locate the Processor Unit away from heat sources because of heat that can build up inside the cabinet.
- Select a location where the vibration is minimal.
- Locate the equipment away from places subject to water splash and rain.
- Leave sufficient space at the sides and rear of the unit to facilitate maintenance.
- A magnetic compass will be affected if the Processor Unit is placed too close to the magnetic compass. Observe the compass safe distances in the SAFETY INSTRUCTIONS to prevent interference to a magnetic compass.
- Install the Processor Unit on the floor, or on a bulkhead referring to the following directions. For bulkhead, the cable entry must face the deck.

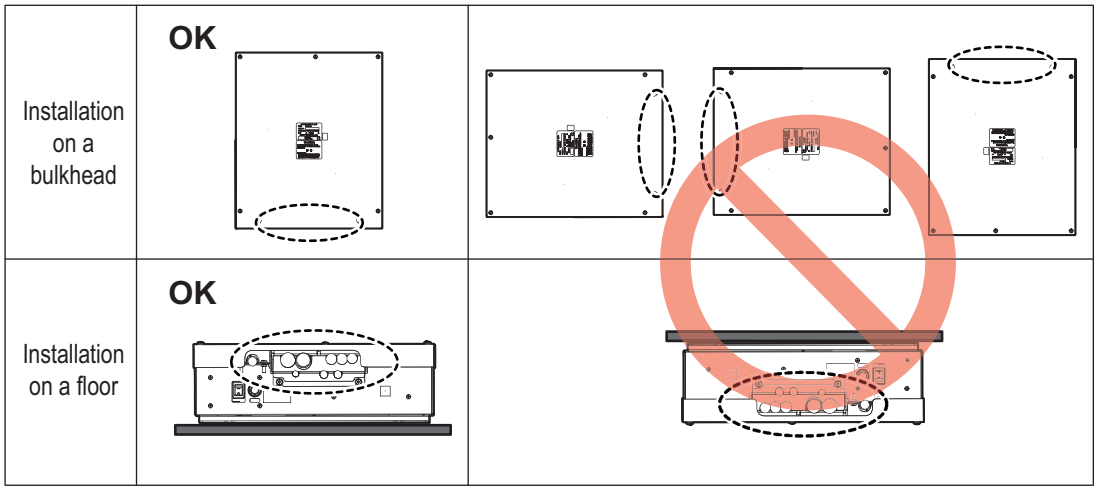

: Cable entry

- Connect the ground wire (IV-8sq, local supply) between the earth terminal on the chassis and the ship's earth, using the supplied crimp-on-lug FV2-4 BLU.

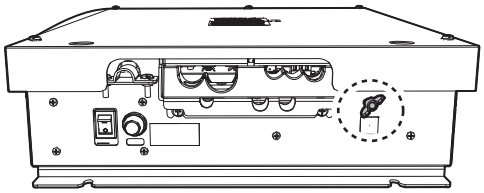

1.5.2 How to install the Power Supply Unit

Use four bolts (M6, local supply) to fasten the Power Supply Unit.

For bulkhead mounting, fasten two bolts for the lower notches, leaving 5 mm of thread exposed from the bolt head. Set the notches of the Power Supply Unit on the two bolts, then fasten two bolts for the upper bolt holes. Then secure the Power Supply Unit in place with all four bolts fastened tightly.

Note: For bulkhead installations, the cable entry must face the deck.

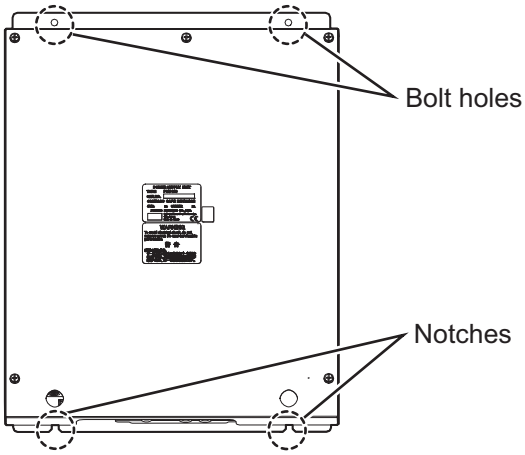

1.6 Processor Unit

This unit can be installed on a bulkhead, wall or on the floor.

1.6.1 Installation considerations

Keep in mind the following points when selecting a location.

- Locate the Processor Unit away from heat sources because of heat that can build up inside the cabinet.
- Select a location where the vibration is minimal.
- Locate the equipment away from places subject to water splash and rain.
- Leave sufficient space at the sides and rear of the unit to facilitate maintenance.
- A magnetic compass will be affected if the Processor Unit is placed too close to the magnetic compass. Observe the compass safe distances in the SAFETY INSTRUCTIONS to prevent interference to a magnetic compass.
- Allow for a service clearance of 100 mm in front of the vent hole (front and rear sides).

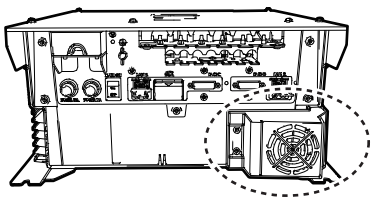

Front view
（Cable entrance side）

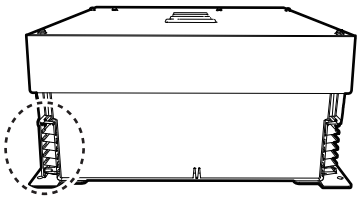

Rear view

: Vent hole

- Install the Processor Unit on the floor, or on a bulkhead with the following direction. For bulkhead, the cable entry must face the deck.

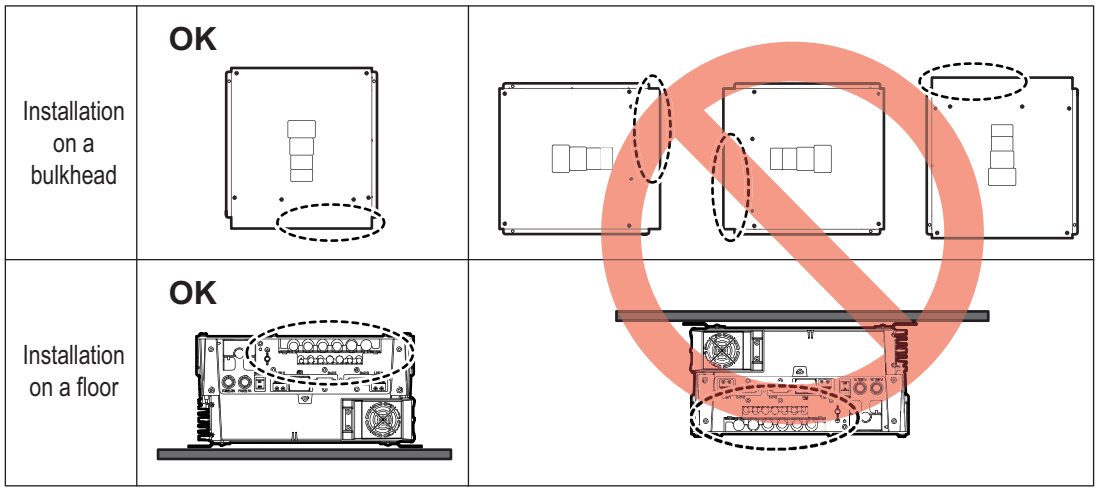

: Cable entry

- Connect the ground wire (IV-8sq, local supply) between the earth terminal on the chassis and the ship's earth, using the supplied crimp-on-lug FV2-M3 BLU.

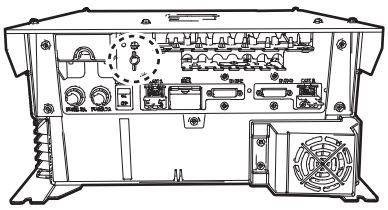

1.6.2 How to install the Processor Unit

Use four bolts (M6, local supply) to fasten the Processor Unit.

For bulkhead mounting, fasten two bolts for the lower notches, leaving 5 mm of thread exposed from the bolt head. Set the notches of the Processor Unit on the two bolts, then fasten two bolts for the upper bolt holes. Then secure the Processor Unit in place with all four bolts fastened tightly.

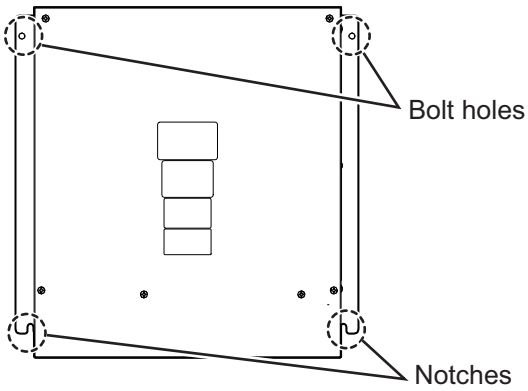

Note: For bulkhead installations, the cable entry must face the deck.

1.7 Transceiver Unit

The transceiver unit is required for TR-DOWN Radar.

Installation considerations

Keep in mind the following points when selecting a location.

- Locate the unit away from heat sources because of heat that can build up inside the cabinet.
- Locate the equipment away from places subject to water splash and rain.
- Leave sufficient space at the sides and rear of the unit to facilitate maintenance.
- Determine the location considering the length of the cable between the transceiver unit and the Antenna Unit and the cable between the transceiver unit and the Power Supply Unit.
- A magnetic compass will be affected if the transceiver unit is placed too close to the magnetic compass. Observe the compass safe distances in the SAFETY INSTRUCTIONS to prevent interference to the compass.
- Be sure to connect the ground wire (between the earth terminal on the chassis and the ship's earth).

How to mount the transceiver unit

Fix the unit to the mounting location with M6 bolts or ϕ6 coach screws. See the outline drawing for mounting dimensions.

1.8 Intelligent Hub (option)

Use the optional Intelligent Hub HUB-3000 to connect gateway network equipment. Do not connect this network to the shipborne LAN network. Further, do not connect a PC to this network, other than for maintenance.

Installation considerations

Keep in mind the following considerations when selecting a location.

- Locate the hub away from heat sources because of heat that can build up inside the cabinet.
- Select a location where the vibration is minimal.
- Locate the hub away from places subject to water splash and rain.
- Be sure to connect a ground (between the earth terminal on the hub and the ship's earth).
- Leave sufficient space at the sides and rear of the unit to facilitate maintenance.
- A magnetic compass will be affected if the hub is placed too close to the magnetic compass. Observe the compass safe distances in the SAFETY INSTRUCTIONS to prevent interference to a magnetic compass.

How to install the Intelligent Hub

1. Use two binding screws (M3×6, supplied) to attach the cable clamp (supplied) to the bottom of the HUB-3000.

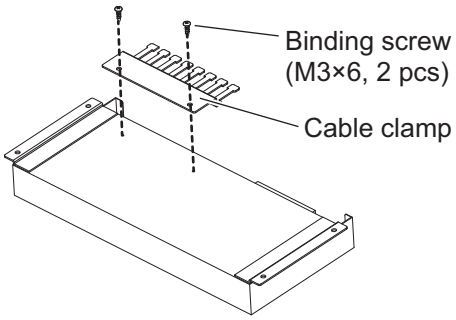

Bottom view

2. Fasten four self-tapping screws (ϕ4×20, supplied) to secure the unit.

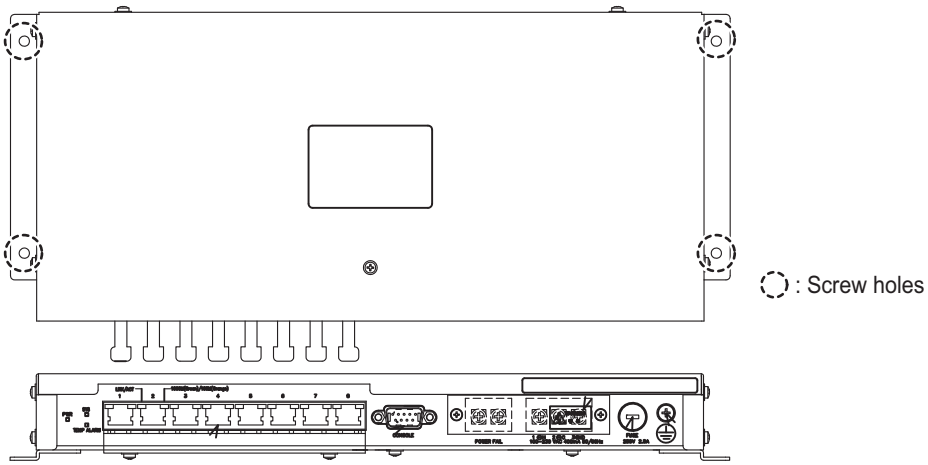

1.9 Switching Hub (option)

Use the HUB-100 to connect sensor networks. This network cannot be connected to the shipborne LAN network. Further do not connect a commercial PC to this network, other than for the maintenance.

For the installation procedure, see the operator's manual for HUB-100 (Pub. No. OMC-35191).

Installation considerations

Keep in mind the following points when selecting a location.

- Locate the hub away from heat sources because of heat that can build up inside the cabinet.
- Select a location where the vibration is minimal.
- Locate the equipment away from places subject to water splash and rain.
- Make sure that the ground wire is connected between the earth terminal on the hub and the ship's earth.
- Leave sufficient space at the sides and rear of the unit to facilitate maintenance.
- A magnetic compass will be affected if the hub is placed too close to the compass. Observe the compass safe distances in the SAFETY INSTRUCTIONS to prevent compass malfunction.

1.10 Junction Box (option)

If the length of the antenna cable is more than 100 m, junction boxes are required. Install the boxes in a location protected from the weather, because their waterproofing standard is IPX3.

Fasten the junction boxes to the mounting location with four sets of M8 bolts and nuts. See the outline drawing for mounting dimensions.

2. WIRING

2.1 Overview

Cable considerations

To lessen the chance of picking up electrical interference where possible, avoid routing the antenna cable (power and LAN lines) near other onboard electrical equipment (radars, TX radio antennas, etc.). Also avoid running the cable in parallel with power cables. When crossing with other cable, the angle must be 90° to minimize the magnetic field coupling.

The antenna cable between the antenna and Processor Units is available in lengths of 15 m, 30 m, 40 m, and 50 m. Whatever length is used, it must be unbroken; namely, no splicing allowed. Use the antenna cable as short as possible to minimize attenuation of the signal.

The radar must be connected to an emergency power source, as required by SOLAS II-1.

About wiring

- The length of LAN cables must be within 50 m.
- Use Cat5e or Cat6 LAN cable for the network if available locally.
- If LAN cables are not available locally, use the optional LAN cables (FR-FTPC-CY for sensor network, DTI-C5E350 VCV for gateway network).
- If extension or division of the DVI or RGB cables is necessary, use the dividers shown below.
  - DVI cable divider: DVI-12A (maker: IMAGENICS)
  - RGB divider: CIF-12H, DD-106 or WBD-14F (maker: IMAGENICS)
- Make sure that the ground wires are connected between the ground terminals on each equipment and the ship's earth.
- Pass the cables through the specified clamp or the locking wire saddle.
- If a UPS (user supply) is connected to this equipment, be sure that the grounding lamp does not light.
- The output from the UPS must be a sine wave, as shown in the figure to the right.

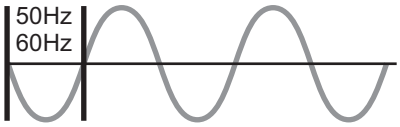

About network construction

- Use the optional Switching Hub HUB-100 to connect the sensor networks. For the gateway networks, use the optional Intelligent Hub HUB-3000.
- Do not connect the ship's LAN network to the optional HUBs. Also, commercial PCs cannot be connected to the gateway network, other than for maintenance.
- To connect the FAR-2xx7 series via LAN network, use the Gateway network.
- This unit does not support IGMP snooping or CGMP enabled switch.
- This unit does not have a router or repeater hub function.
- The Switching HUB HUB-100 does not support IGMP snooping or GCMP enabled switch.

2.1.1 Standard wiring

A Cat 5e LAN cable (RW-00135, RW-00339) connects between the Antenna Unit (Power Supply Unit for FAR-2x58) and the Processor Unit. The maximum length of the cabling between the Processor Unit and the Antenna Unit is 80 m.

Retrofit (using antenna cable RW-9600/4896) or foremast installation is also possible, with the installation of a pair of LAN Signal Converters, one in the Antenna Unit, the other in the Processor Unit. See section 2.10.

X-band/S-band (TR-UP) radars for FAR2x18/2x28/2x38 radars

The appropriate radars are FAR-22x8(-BB), FAR-2228-NXT(-BB), FAR-23x8, FAR-2328-NXT, FAR-22x8S(-BB), FAR-23x8S(-NXT) and FAR-2238S-NXT(-BB).

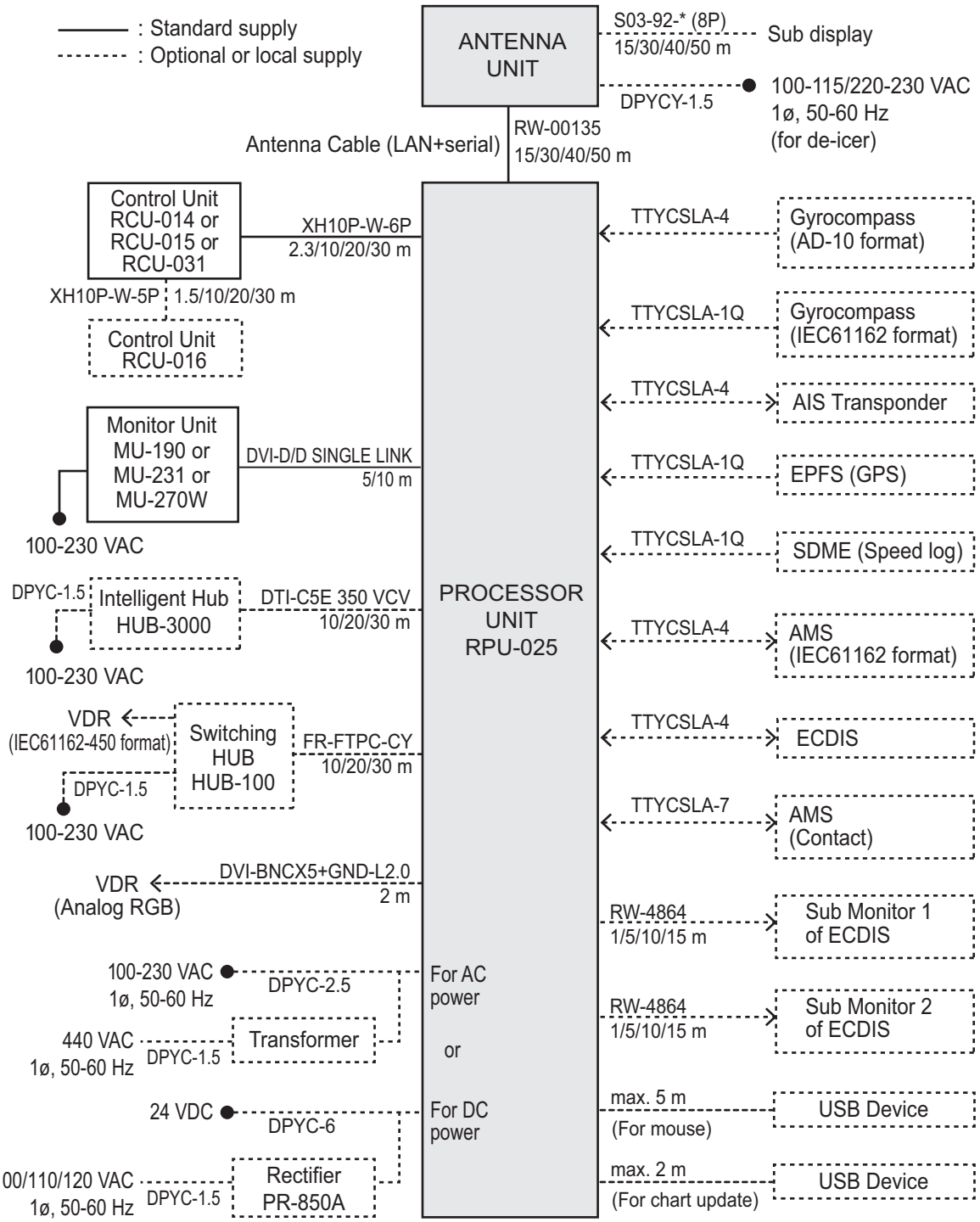

X-band radars for FAR2x58 radars

The appropriate radars are FAR-2258(-BB), FAR-2358.

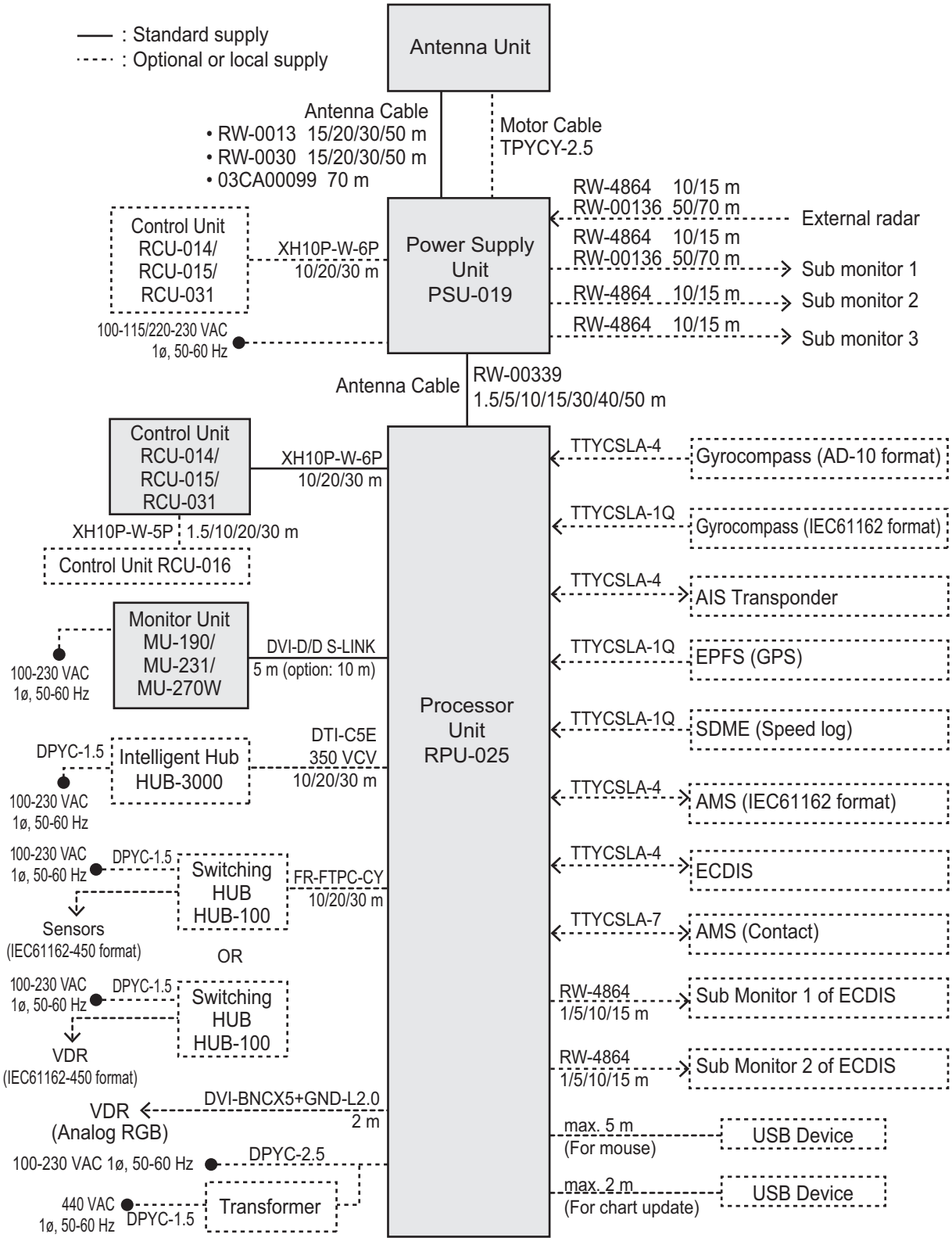

X-band/S-band (TR-DOWN) radars

The appropriate radars are FAR-2328W and FAR-2338SW.

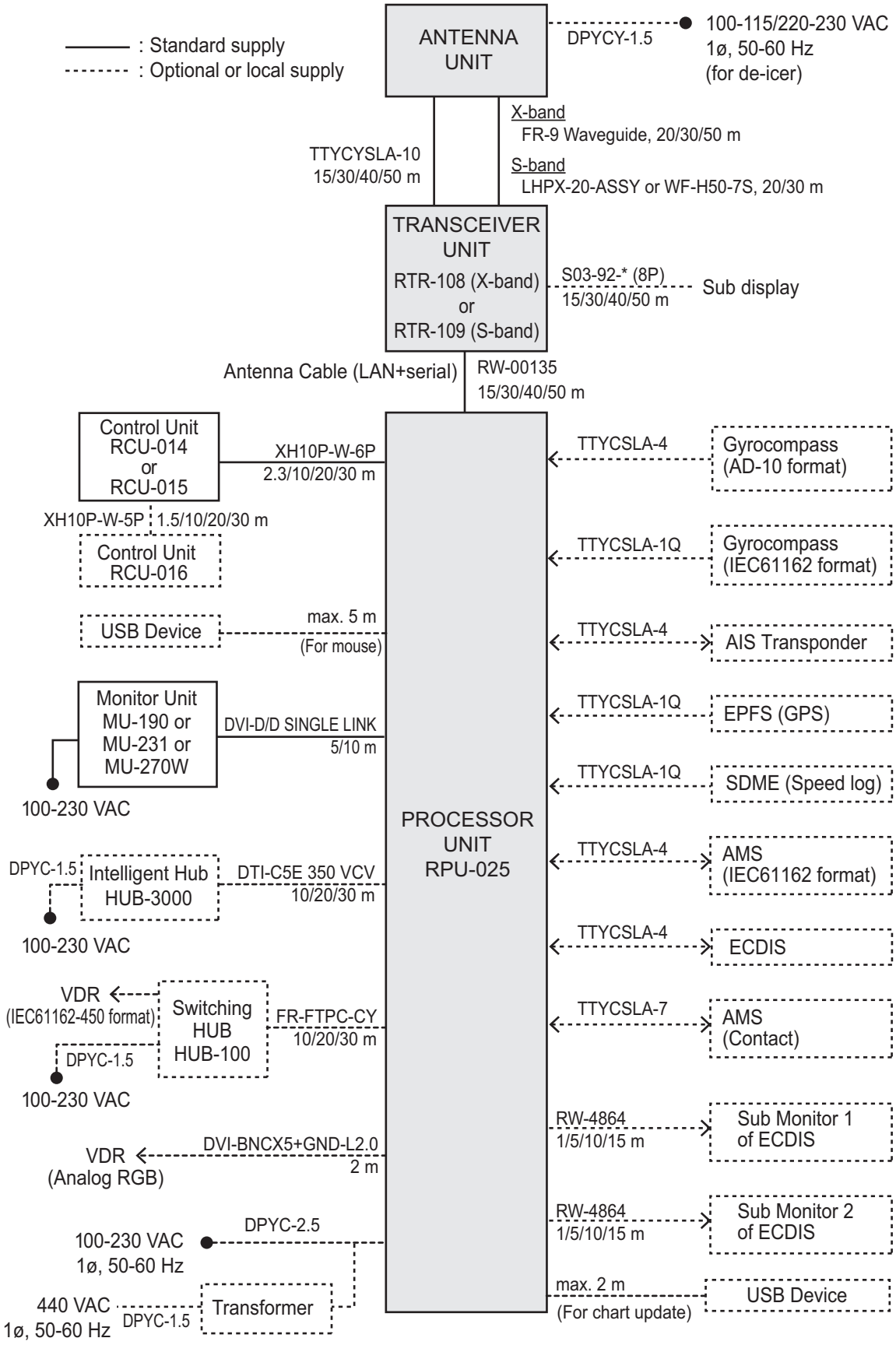

2.2 Antenna Unit for X-band, TR-UP Radar

2.2.1 How to fabricate the cables

LAN cable

1

Expose inner vinyl sheath.

2

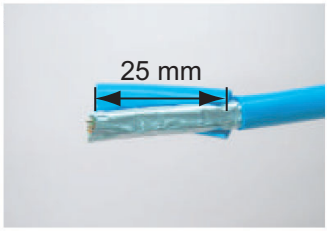

Remove the inner vinyl sheath by approx. 25 mm. Be careful not to damage inner shield and cores.

3

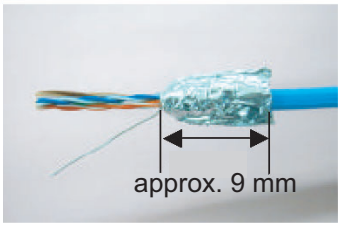

Fold back the shield, wrap it onto the inner vinyl sheath and cut it, leaving approx. 9 mm.

4

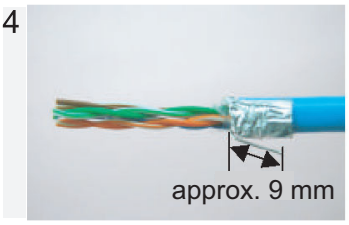

Fold back drain wire and cut it, leaving approx. 9 mm.

5

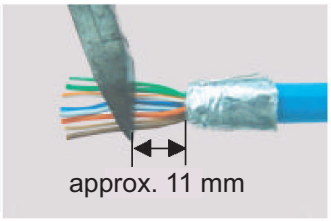

Straighten and flatten the cores in colored order and cut them, leaving approx. 11 mm.

6

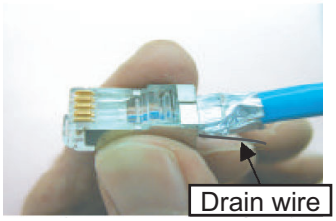

Insert the cable into the modular plug so that the folded part of the shield enters into the plug housing. The drain wire should be located on the tab side of the jack.

7

Using special crimping tool MPT5-8AS (PANDUIT CORP.), crimp the modular plug. Finally, check the plug visually.

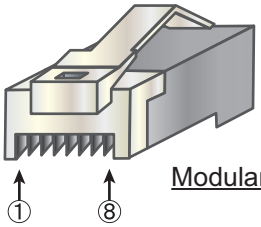

Modular plug

[Crossover cable]

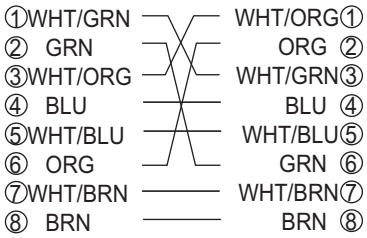

[Straight cable]

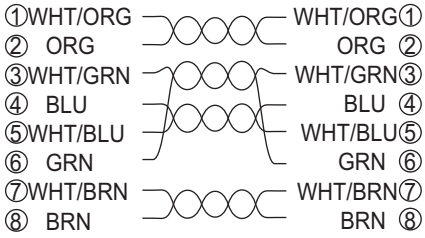

WAGO connector

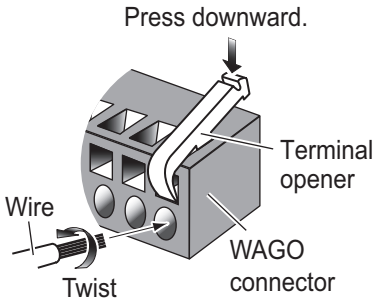

Procedure

1. Twist the cores.
2. Press the terminal opener downward.
3. Insert the wire to hole.
4. Remove the terminal opener.
5. Pull the wire to confirm that it is secure.

A terminal opener is provided on the circuit board as below.

- FAR-2x18/2x28/2x38 radars

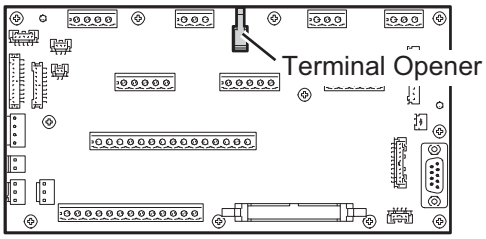

TB Board 03P9648
(Processor Unit)

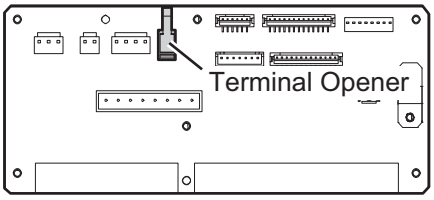

RF-TB Board 03P9570
(Antenna Unit/Transceiver Unit)

- FAR-2x58 radars

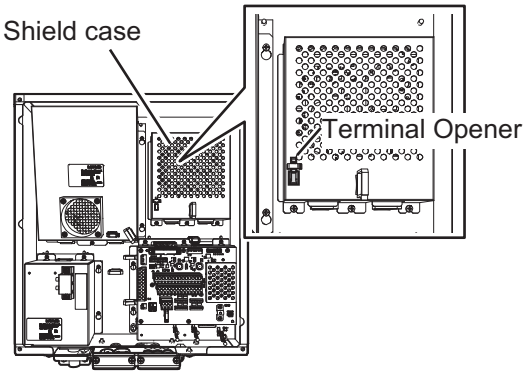

(Power Supply Unit)

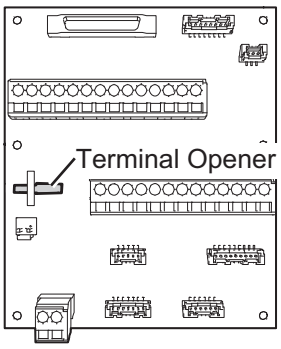

RF-TB Board 03P9665
(Antenna Unit)

RW-00135 (Antenna cable for FAR-2x18/2x28/2x38 radars)

For X-band radar, the end of the antenna cable RW-00135 which connects to the Antenna Unit is pre-fabricated.

RW-0013/RW-0030/03CA00099 (Antenna cable for FAR-2x58 radars)

- RW-0030: With armor

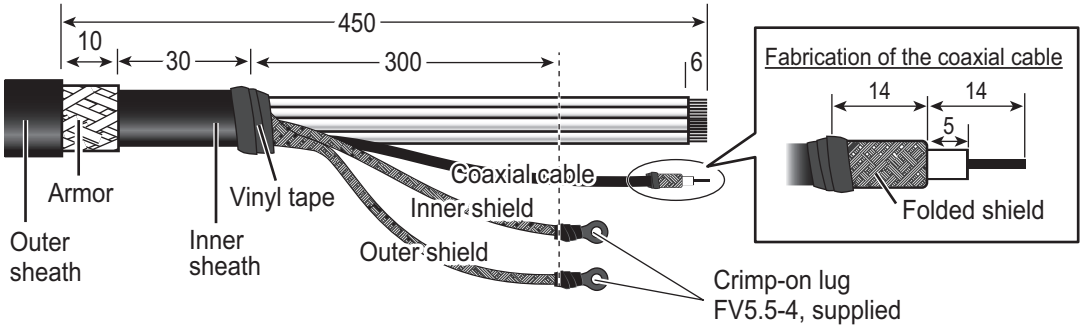

- RW-0013/03CA00099: No armor

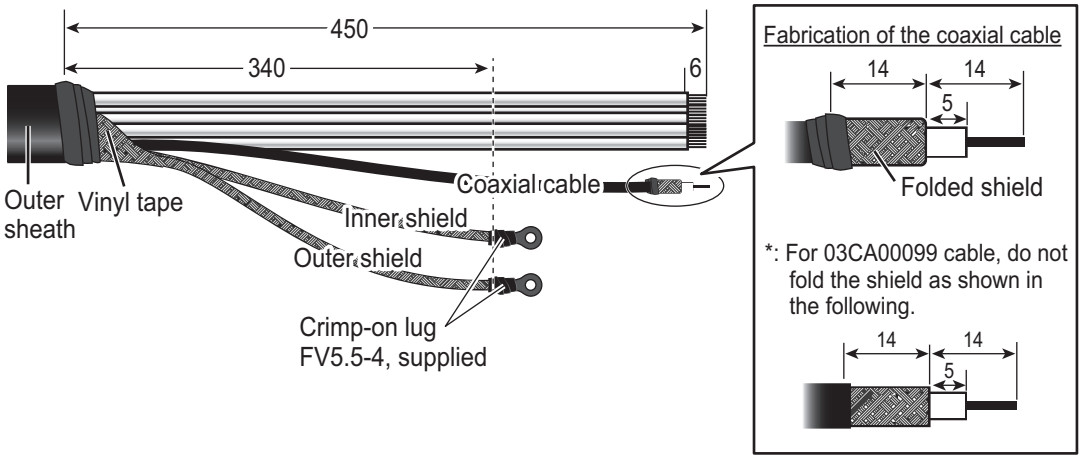

RW-9600/6895/4873 (for retrofit or foremast installation for FAR-2x18/2x28/2x38 radars)

The existing cable (RW-9600/6895/4873) can be used for the following cases.

- Cable extension for foremast installation (only for RW-9600 cable)
- Retrofit

Depending on your installation, one or more of the following kits (available as optional extras) may be required. For the LAN Coaxial Converter, see section 2.10 "LAN Signal Converter" and for details.

- LAN Signal Converter: Type: OP03-247-3
- Retrofit Cable Kit: Type: OP03-255-3

Cable type	Antenna specification	Cable entrance	LAN Signal Converter	Retrofit Cable Kit
RW-9600	w/LAN signal converter	Cable cover	—	—
		Bottom of chassis	—	✓
	w/o LAN signal converter	Cable cover	✓	—
		Bottom of chassis	✓	✓
RW-6895 RW-4873	w/o LAN signal converter	Bottom of chassis	✓	✓

("✓": Required, "—": Not required)

Note: The maximum antenna cable length is 100 m for RW-9600, 50 m for RW-6895/4873. If the existing antenna cable is longer than the above maximum length, replace the antenna cable with RW-00135.

For wiring the RW-9600 cable via the cable cover, the cable fabrication is shown below. In other cases, see the installation manual in the optional kit.

The unused power lines are tied up and attached to the crimp-on lug FV5.5-S4 (LF), supplied locally. Connect these unused lines to the ground terminal with the shield line. See the interconnection diagram at the back of this manual for details.

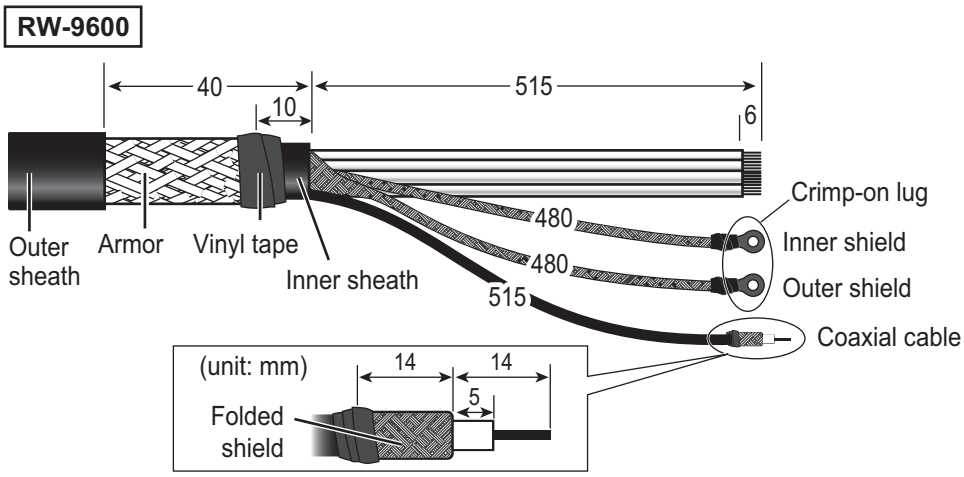

S03-92-15/30/40/50 (RW-00136 + connector, for a sub monitor)

Note: The maximum cable length is 50 m.

Clamp the armor with the cable clamp.

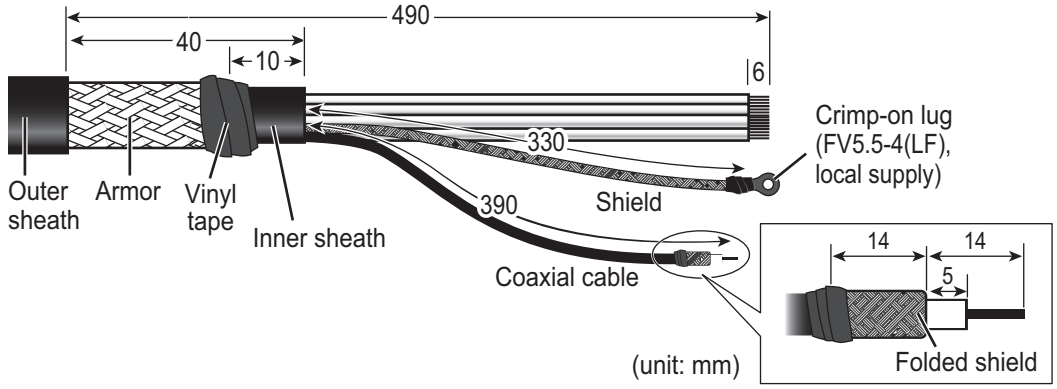

DPYCY-1.5 (for the optional de-icer, FAR-2x18/2x28/2x38 radas)

- Before beginning any work on the Antenna Unit, turn off the breaker for the de-icer at the mains switchboard. (Turning off the display unit has no effect.)
- The neck of the Antenna Unit becomes VERY HOT when the de-icer is working. (The de-icer turns on when ambient temperature goes down to 5°C and heats to 55°C.)

Clamp the armor with the cable clamp.

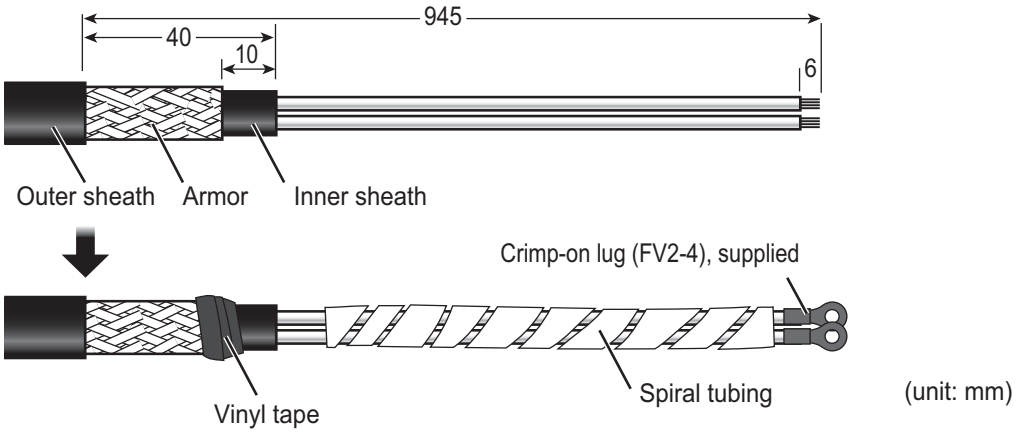

TPYCY-2.5 (Motor power cable)

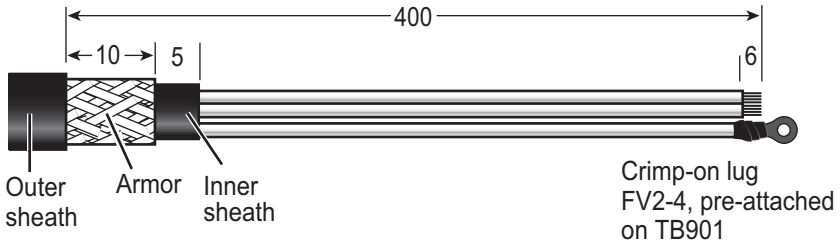

2.2.2 How to connect the cables for X-band radar (TR-UP, FAR-2x18/2x28/2x38 radars)

NOTICE

If there is a chance of inclement weather when the RF unit is removed, cover the intakes on both covers with packing tape for waterproofing. Be sure to remove the tape after completing the installation.

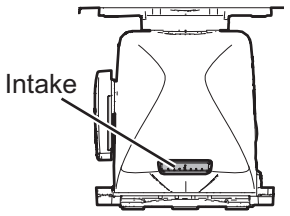

Some parts or wiring have been omitted from the illustrations for clarity. Also, in the procedure, mainly figures of magnetron radar are shown.

1. Unfasten four bolts from the rear cover to remove the rear cover. If the de-icer is already installed or will be installed, remove two bolts inside the antenna to remove the front cover.

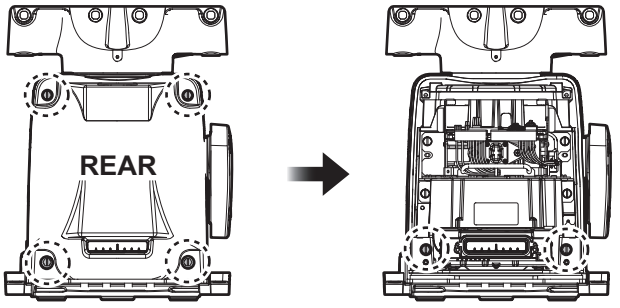

For de-icer installation

Note 1: The cable for the performance monitor is connected between the rear cover and the RF-TB Board in the Antenna Unit. Open the cover slowly to prevent damage to the cable and connector.

Note 2: If the de-icer is to be installed, spread open the right and left heater elements on the cover, then remove the front cover, being careful not to hit the elements on the radiator or chassis.

Note 3: If this a retrofit or foremast installation, a LAN Signal Converter is required, in both the Antenna Unit and the Processor Unit. See section 2.10.

2. Disconnect the performance monitor connector (J807) and the motor drive connectors (J803, J804 and J808) from the RF-TB Board.

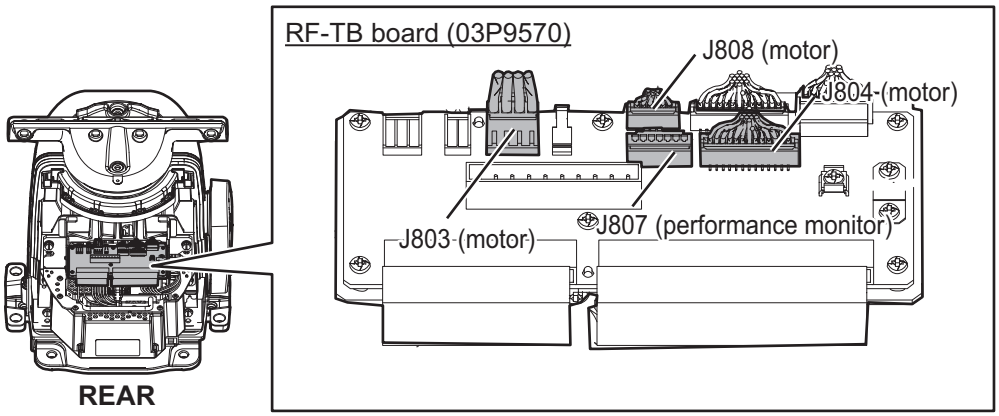

3. Unfasten the six bolts in the figure below to enable removal of the transceiver unit. Then, pull the handle on the transceiver unit to remove the unit. **For magnetron radar, lay the unit on its side or on top of non-ferrous material, to prevent demagnetization of the magnetron**

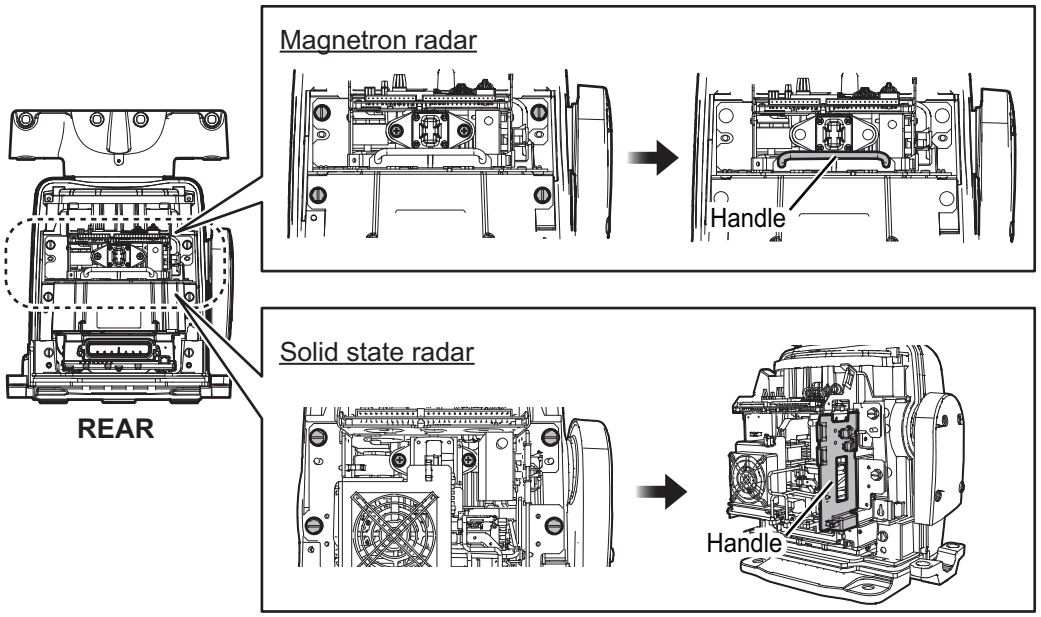

4. Unfasten four screws to open the cable entrance cover.

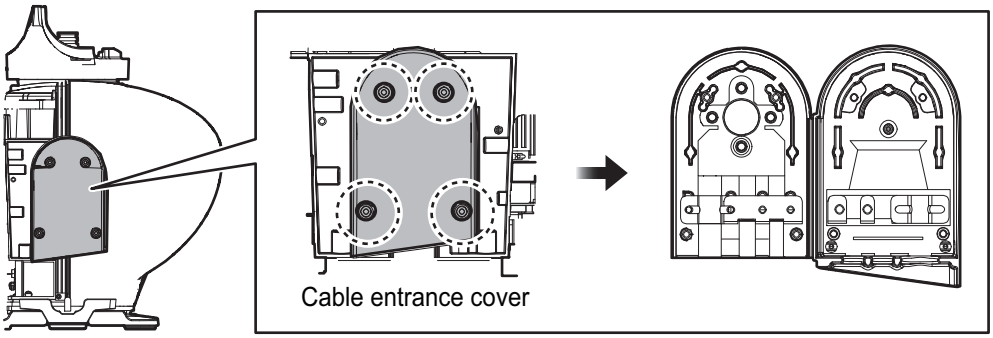

How to change the orientation

The orientation of the cable entrance can be changed, in one of the three orientations shown in the following figure. **No other orientation is allowed, to maintain watertight integrity.** The default orientation is "deck". To change the entrance, unfasten the four screws circled in the following figure, then orient the cable entrance in the required direction. Refasten the screws.

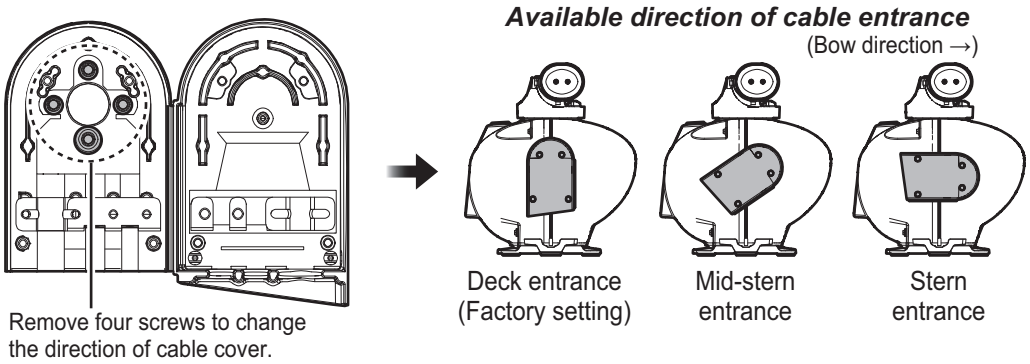

5. Unfasten the two screws fixing the cable clamp for antenna cable, then pass the antenna cable through the cable entrance.

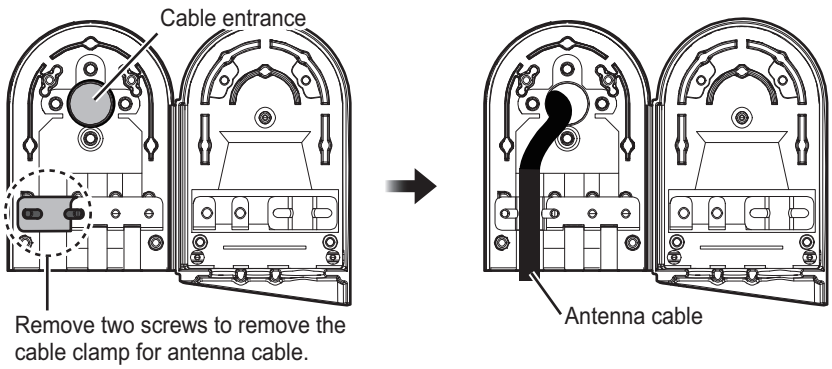

If applicable, unfasten the two screws fixing the cable clamp for the sub monitor and de-icer power cable, then pass the cables through the cable entrance.

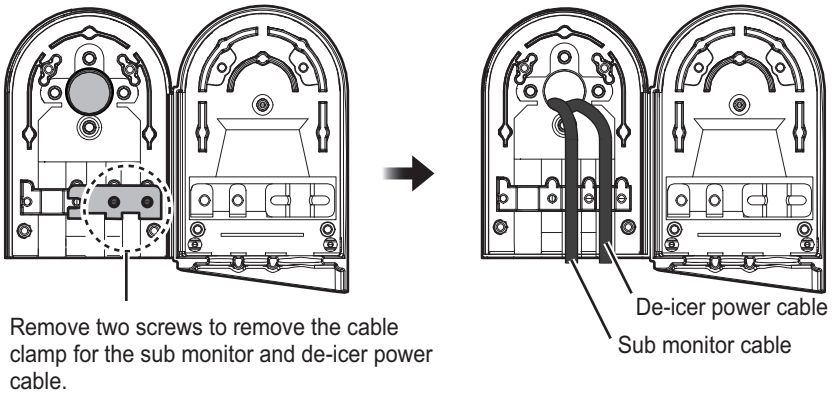

Note: The dummy plug is provided to insert into the unused cable slot. Insert the plug for waterproofing.

6. Pass the cables through their respective locking wire saddles in the chassis from the cable entrance.
   Note: Make sure to pass the cable through the specified locking wire saddle.

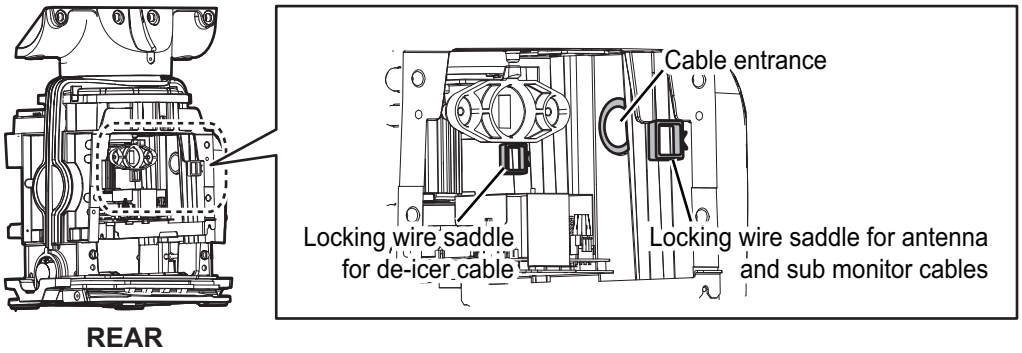

7. Re-mount the transceiver unit then reconnect the connectors for the motor (J803, J804 and J808).
8. Attach the appropriate WAGO connectors (pre-attached) to the appropriate cables, and then connect the antenna and sub monitor cables to the RF-TB Board as shown in the following figure. For how to connect the WAGO connector, see "WAGO connector" on page 2-6. For pin arrangement, see the interconnection diagram at the back of this manual.
   Note 1: Make sure to pass the cable through the specified locking wire saddle.
   Note 2: A terminal opener is provided on the RF-TB Board.
   - Destination of antenna cable
     Power line: TB801 through the locking wire saddles (A, two places).
     LAN cable: J821 through the locking wire saddles (B, two places).
     Shield of power line: Screw on fixing plate (C)
     Shield of LAN cable: Screw (D)

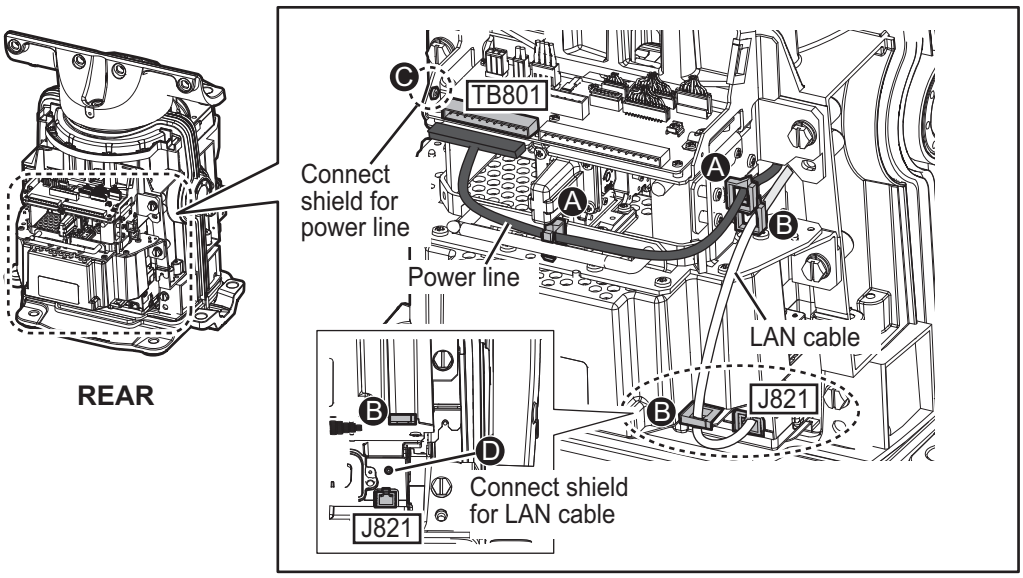

Note: For the antenna cable RW-9600/6895/4873, connect the crimp-on lug (that binds unused wires) together with the shield of the power line.

- Destination of sub monitor cable
  Signal line: TB803 through the locking wire saddle (A).
  Coaxial cable: TB804 (B)
  Shield of signal cable: Screw on fixing plate (C)

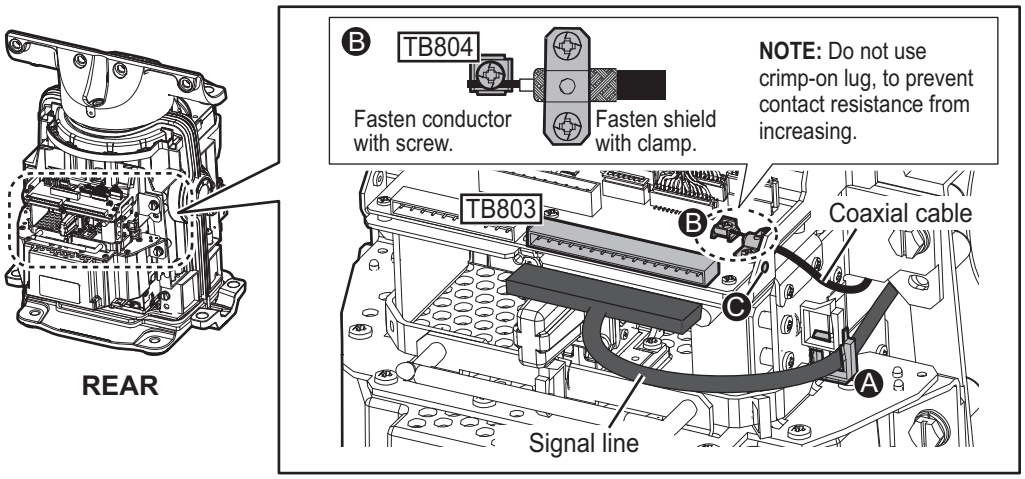

9. **DE-ICER INSTALLATION**. See also "De-icer Kit Installation Instructions" (for TR-UP radar, C32-01313), issued separately, for the de-icer not fitted at the factory. If the de-icer is not provided, go to step 10.

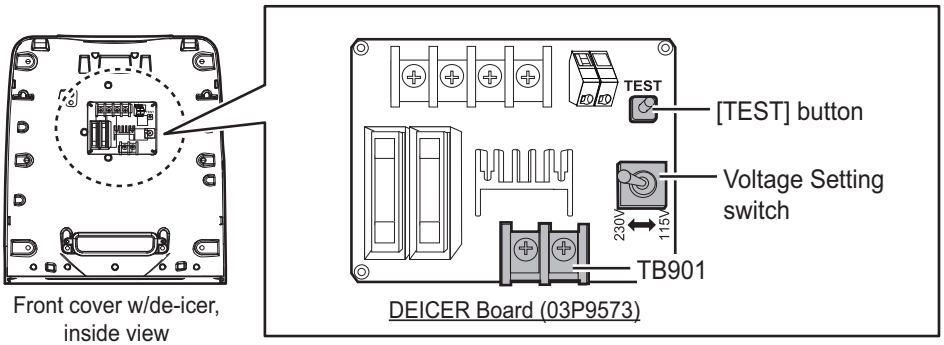

1) Set a locking wire saddle (supplied) at locations (B) and (C) shown in the following figure. Pass the de-icer power cable from cable entrance through the locking wire saddles (A), (B) and (C) and pull it to the front side.

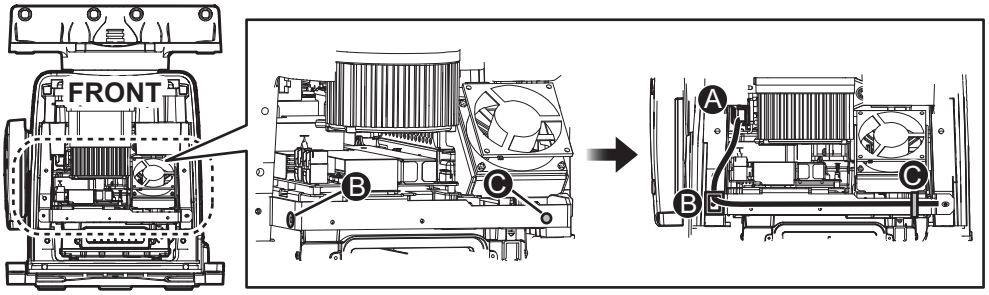

2) Unfasten the cable band* on the front cover. Pass the de-icer power cable through the band then fasten the band. Connect the cable to TB901 on the DE-ICER board (03P9573), using the supplied crimp-on lugs.

*: For the DE-ICER installation kit, unfasten the cable band on the cover supplied. (The original cover can be discarded.)

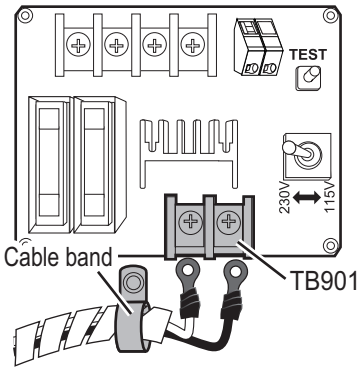

3) Set the Voltage Setting switch according to the power source for the de-icer; 115 V or 230 V. The default setting is 230 V.

4) Apply power to the de-icer then press and hold the **TEST** button for about ten seconds. Check that the heater gets hot and then release the **TEST** button.

5) Coat the gasket (all brims) of the intake with the supplied oil compound. Be sure to coat the gasket completely.

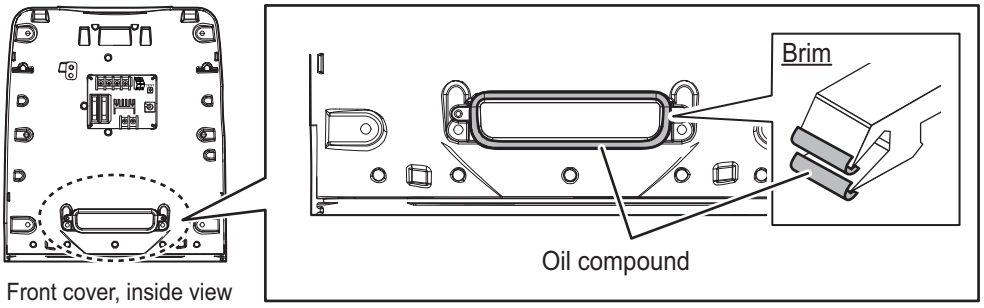

6) Set the front cover to the Antenna Unit. Take care not to hit the heater elements on the chassis or radiator.

7) Fasten the base of the heater as shown in the following figure, using the supplied installation materials.

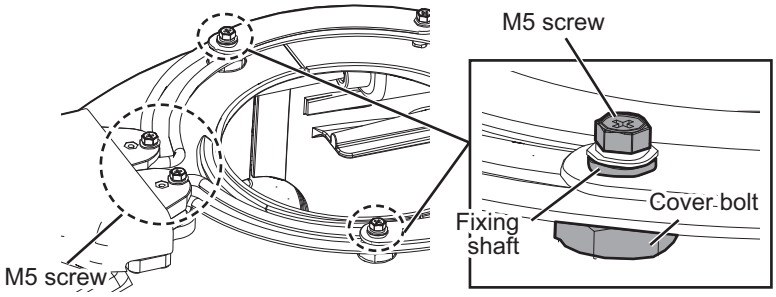

8) Attach the supplied earth label over the earth label currently attached near the grounding terminal.

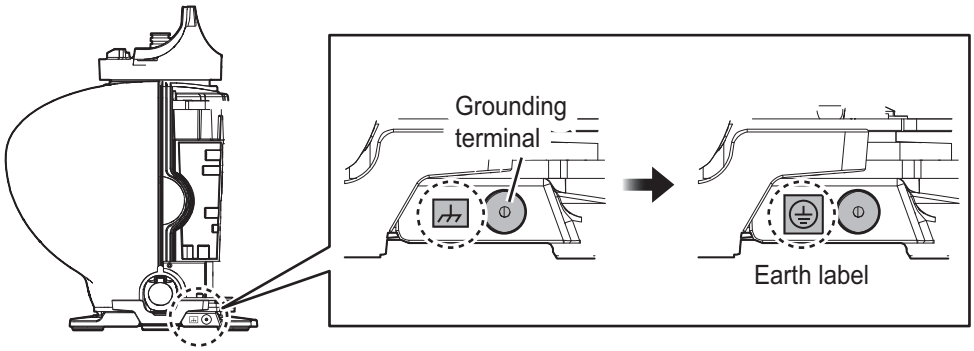

10. Position the cables so their armors lie beneath their respective cable clamps in the cable entrance. Fasten the cable clamps.

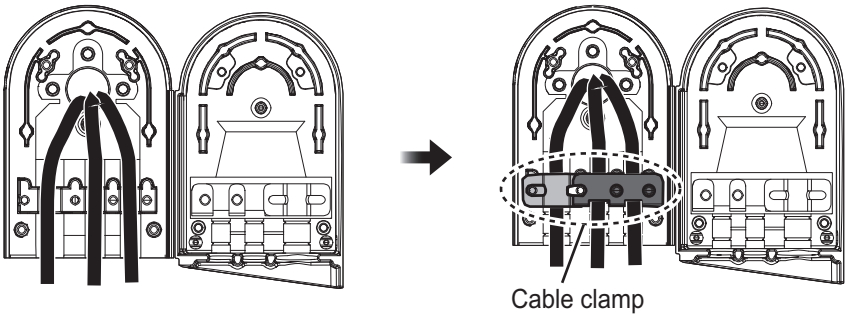

11. Coat the hinge with the supplied adhesive for hinge waterproof then close the cable entrance cover. Fix the cable cover with four screws, then coat the screws with the supplied adhesive.

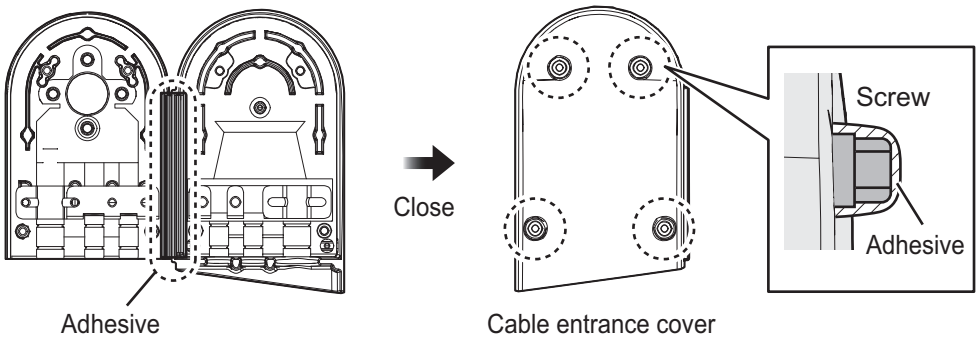

12. Reconnect the performance monitor connector (J807) to the rear cover.

13. **Check that the gasket on the front and rear covers is seated properly**, then close the covers. The torque for the fixing bolts must be 10.0 N•m.

    Note 1: If it is necessary to open the front cover after installing the de-icer kit, remove the de-icer power cable from the locking wire saddle as shown in the following figure, then detach the cover slowly to prevent damage to the heater element.

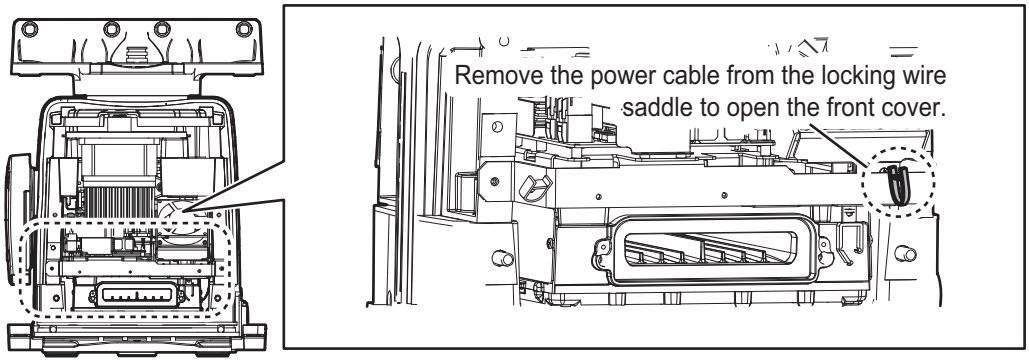

Note 2: For the de-icer, take care not to hit the heater elements on the chassis or radiator. If the heater hits something, unfasten the fixing screws for the heater to adjust the position of the heater. Then fix the heater again.

2.2.3 How to connect the cables for X-band radar (TR-UP, FAR-2x58 radars)

Some parts or wiring have been omitted from the illustrations for clarity.

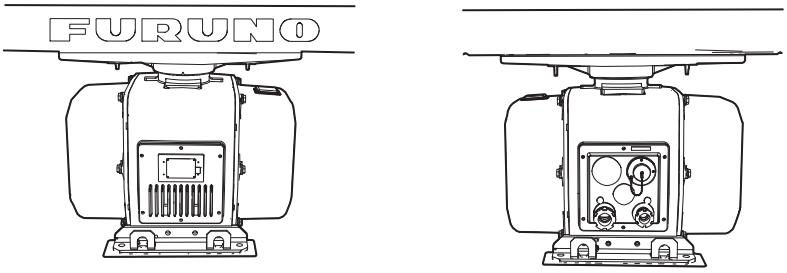

Front
(Nameplate side)

Rear
(Cable entry side)

1. Loosen 12 bolts from both covers to remove the covers.

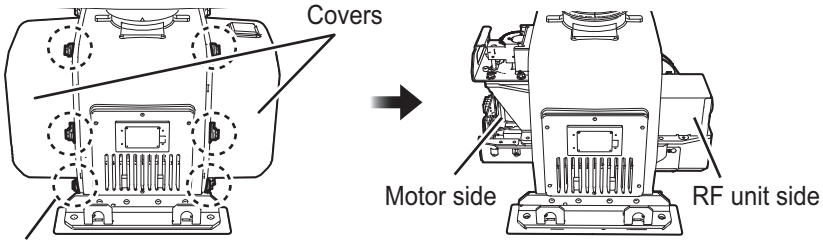

12 places on both covers.

Note 1: If the performance monitor is installed, the cable for the performance monitor is connected between the cover for the RF unit side and the RF-TB Board in the Antenna Unit. Open the cover slowly to prevent damage to the cable and connector.

Note 2: Both covers have the safety chains to prevent falling covers.

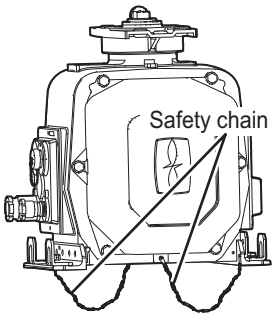

2. Disconnect the motor drive connectors (J917, J918) and the BP connector (J911) from the RF-TB Board. If the performance monitor is installed, disconnect the performance monitor connector (J916).

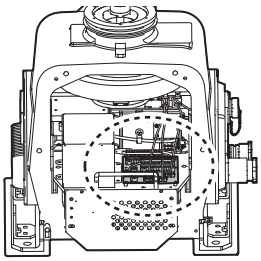

RF unit side

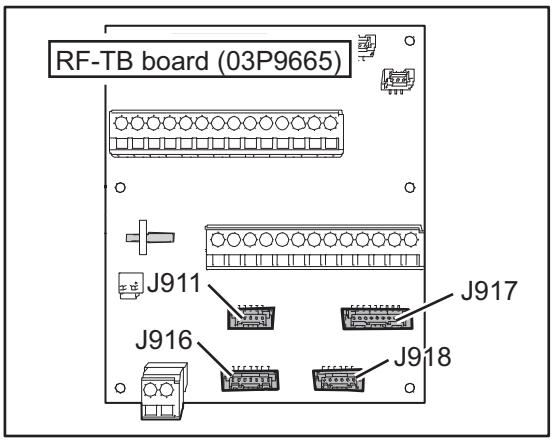

3. Unfasten the two bolts circled in the figure below to enable removal of the RF unit. Then, pull RF unit to remove it with the handle. To move the RF unit, use two handles on the RF unit.

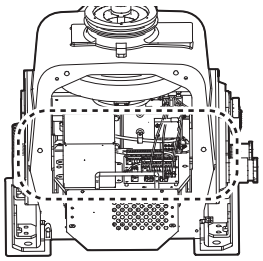

RF unit side

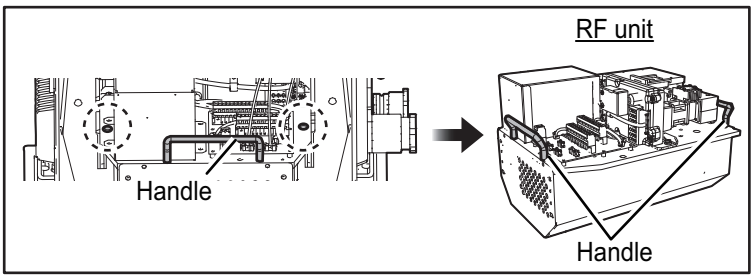

Note: The magnetron in the transceiver module will demagnetize if it contacts ferrous material. When dismounting the transceiver module, lay it on its side or on top of non-ferrous material as shown in the figure to the right.

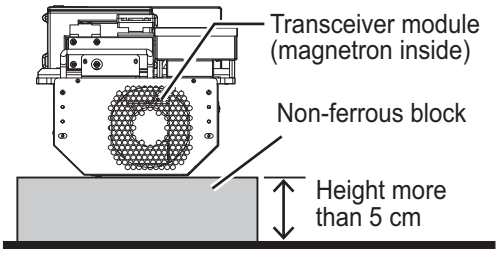

4. Unfasten the cable glands for the antenna and power cables on the rear side and remove the gasket, three flat washers and remove the protector of each entrance.

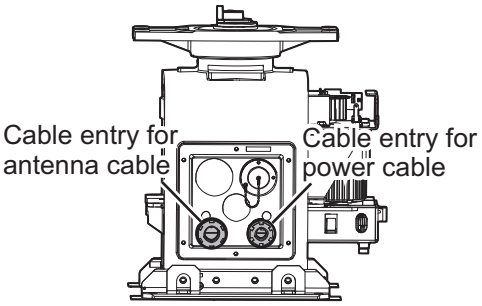

Rear side

5. Slide the flat washers and gasket onto the cables as shown in the figure below.

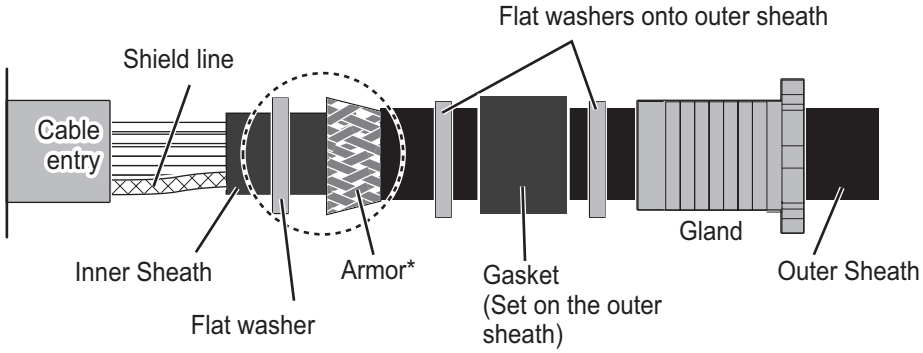

***: For the cable without armor**

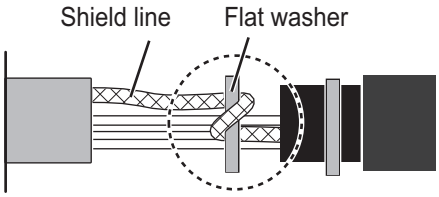

The shield line should be wound once on the flat washer.

6. Push the flat washer against the armor then sandwich in the armor between two flat washers.
7. Trim the armor so that it does not extend past the flat washers.
8. Pass the antenna and power cables through each cable entrance and attach the appropriate connectors to the appropriate cables. For how to connect the cables to WAGO connector, see "WAGO connector" on page 2-6. For pin arrangement, see the interconnection diagram at the back of this manual.
   Note: A terminal opener is provided on the RF-TB Board.

Motor power cable

1) Pass the motor power cable as follows:
2) Connect the wires of the motor power cable to the Terminal board TB901 on the front side through the appropriate wiring clamps, according to wiring sticker.

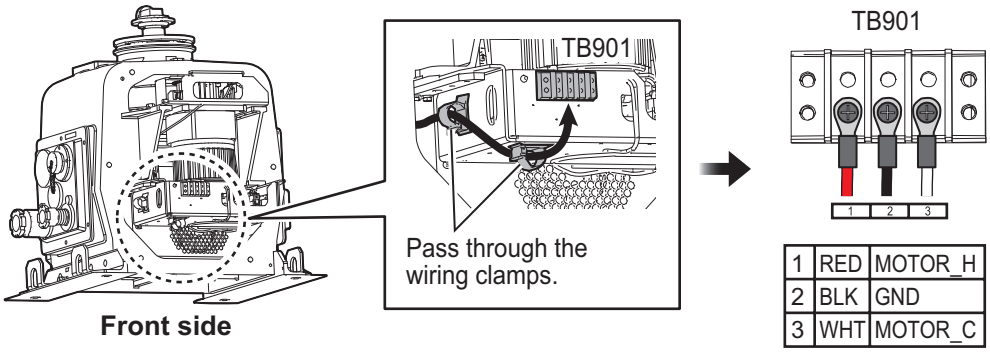

1	RED	MOTOR_H
2	BLK	GND
3	WHT	MOTOR_C

Antenna cable

1) Pass the antenna cable as follows:
2) Connect the wires of the antenna cable to the appropriate WAGO connectors (pre-attached on the RF-TB board).
   Coaxial cable: TB902 on the TNC Junction Box, passing **over** the slide rail.
   Signal lines: TB801, TB802 and TB803, passing **over** the slide rail.
   Shield lines: Wing bolt, passing **under** the slide rail.

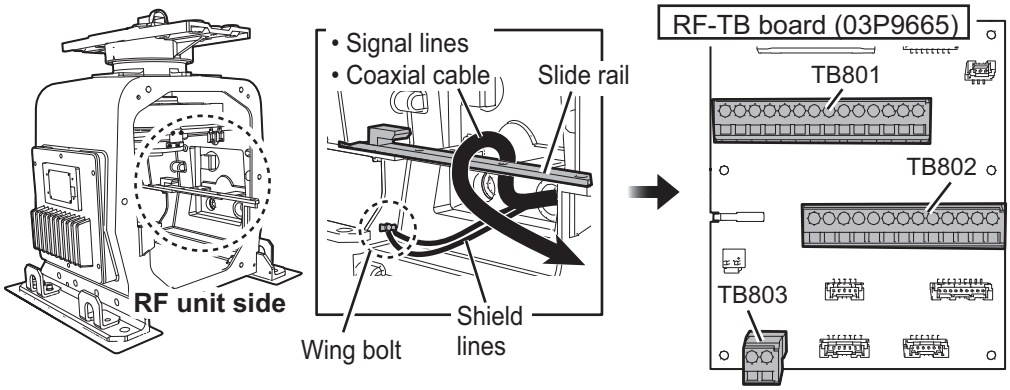

3) Remove the TNC junction box from the RF unit and then connect the coaxial cable of the antenna cable to the BNC case.

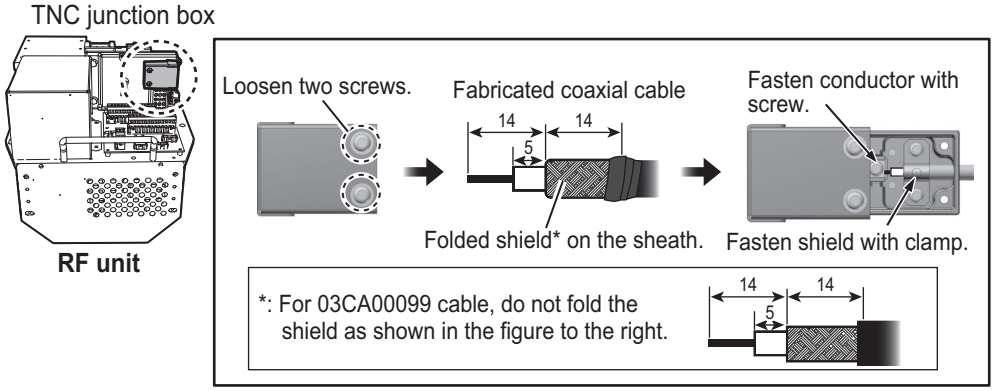

4) Re-mount the TNC junction box to the RF unit.

9. Apply the supplied adhesive to the threads of the cable glands, and then fasten it tightly with the hook spanner.
   Note: Use the wrench of the correct size referring to cable gland size below. If you do not have the hook spanner, contact your dealer.
   - Gland for the antenna cable: ϕ50
   - Gland for the motor cable: ϕ42
10. Re-mount the RF unit then reconnect the motor drive connectors (J917, J918) and the BP connector (J911) to the RF-TB Board, referring to step 2 on page 2-17.
    Note: When mounting the RF unit, take care not to pinch the power cable with the RF unit. The power cable can be damaged.
11. If required, reconnect the performance monitor connector (J916).
12. **Check that the gasket on both covers are seated properly**, then close the covers. The torque for the fixing bolts must be 28.0 N•m.

2.3 Antenna Unit for X-band, TR-DOWN Radar

2.3.1 How to fabricate the cables

Three cables are connected to the Antenna Unit: the serial cable from the transceiver unit, waveguide, and de-icer power cable (option).

For how to connect the WAGO connector, see "WAGO connector" on page 2-6.

TTYCYSLA-10 (for serial cable)

Clamp the armor with the cable clamp.

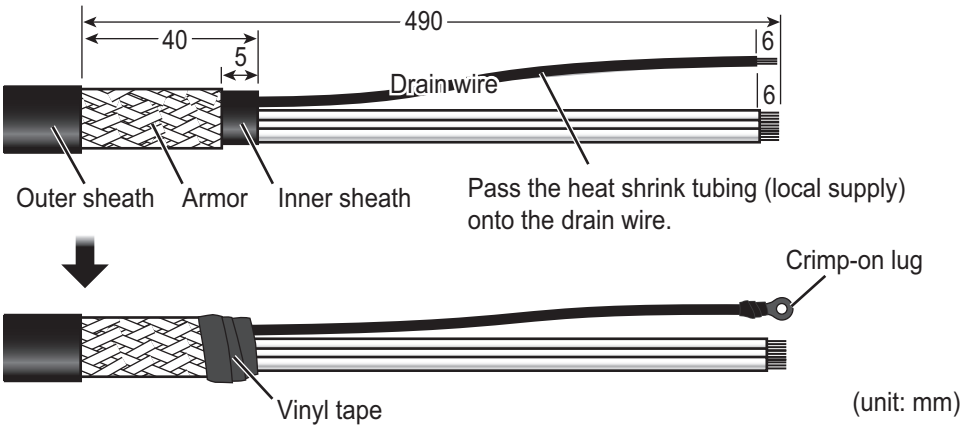

DPYCY-1.5 (for the optional de-icer)

- Before beginning any work on the Antenna Unit, turn off the breaker for the de-icer at the mains switchboard. (Turning off the display unit has no effect.)
- The neck of the Antenna Unit becomes VERY HOT when the de-icer is working. (The de-icer turns on when ambient temperature goes down to 5°C and heats to 55°C.)

Clamp the armor with the cable clamp.

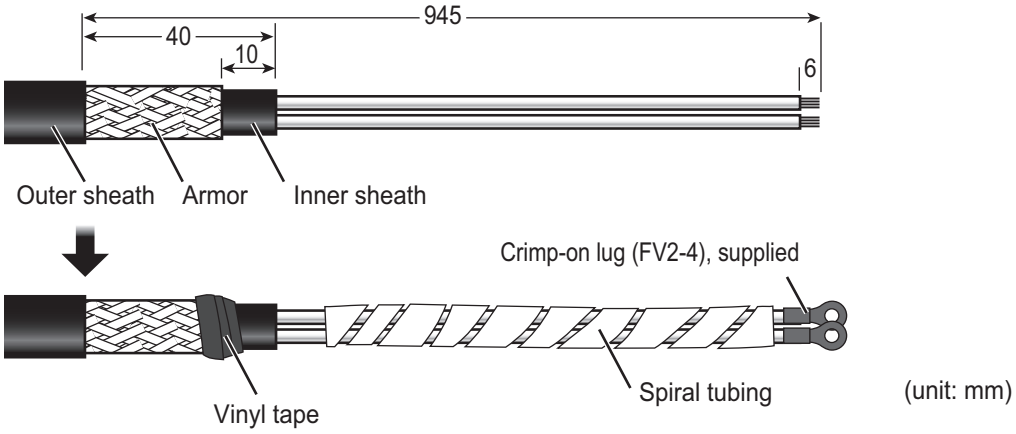

Flexible waveguide

The connector at the antenna side is pre-attached to the flexible waveguide. The bending radius shown below must be observed to prevent damage to the waveguide.

Bending radius→ E-bend: 200 mm, H-bend: 400 mm

2.3.2 How to connect the cables for X-band (TR-DOWN) radar

1. Unfasten four bolts from the rear cover to remove the rear cover. If the de-icer is already installed or will be installed, remove two bolts inside the antenna to remove the front cover.

   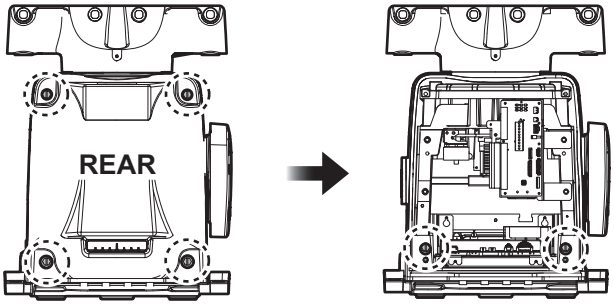

   For de-icer installation

   Note 1: The cable for the performance monitor is connected between the rear cover and the RF-TB Board in the Antenna Unit. Open the cover slowly to prevent damage to the cable and connector.

   Note 2: If the de-icer is to be installed, spread open the right and left heater elements on the cover, then remove the front cover, being careful not to hit the elements on the radiator or chassis.

2. Disconnect the performance monitor connector (J807) from the RF-TB Board.

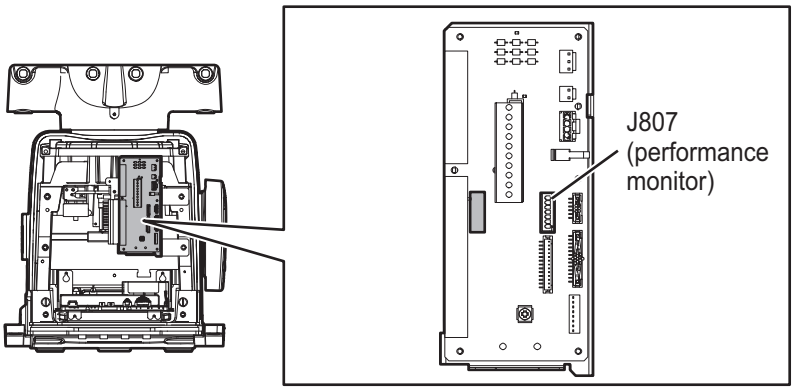

3. Unfasten four screws to open the cable entrance cover.

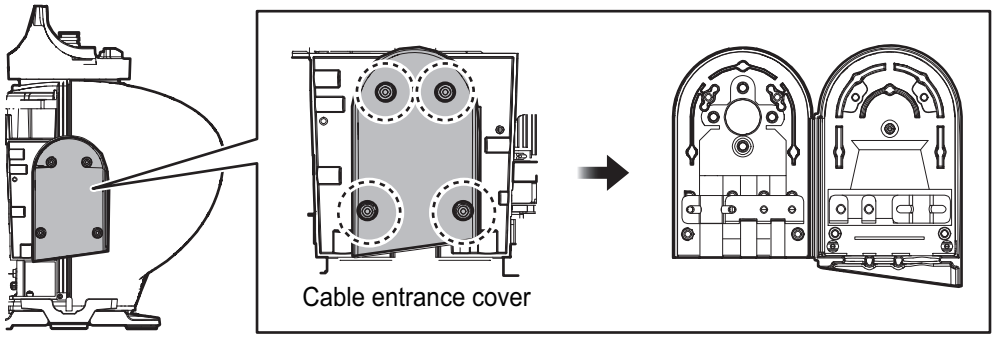

Note: The orientation of the cable entrance can be changed. See "How to change the orientation" on page 2-11.

4. Unfasten the two screws fixing the cable clamp for the serial cable, then pass the serial cable (TTYCYSLA-10) through the cable entrance.

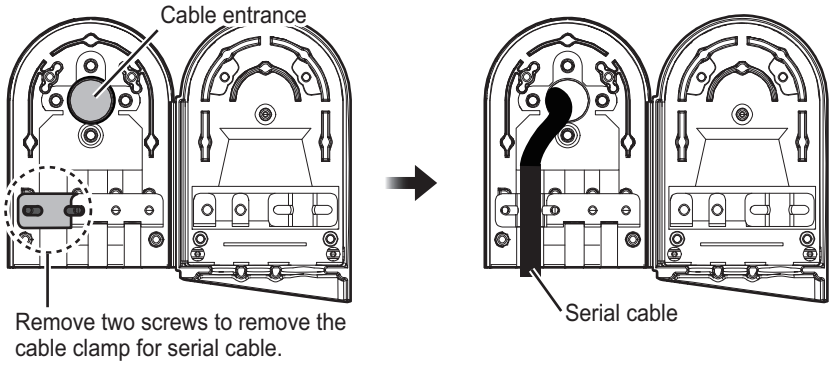

If applicable, unfasten the two screws fixing the cable clamp for the de-icer power cable, then pass the cables through the cable entrance.

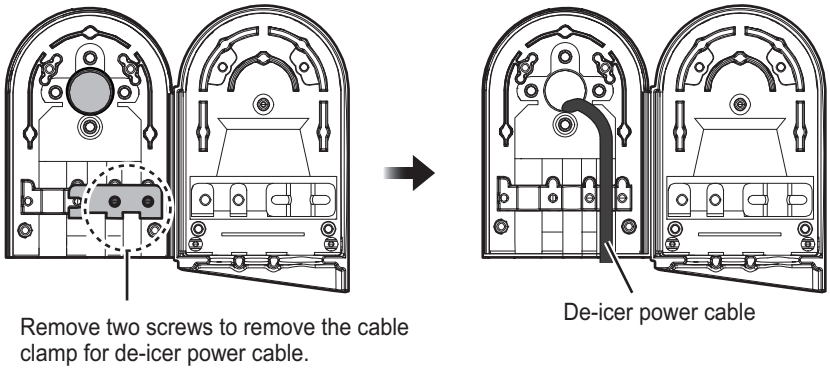

Note 1: The dummy plug is provided to insert into the unused cable slot. Insert the plug for waterproofing.

Note 2: The sub monitor cable is connected to the transceiver unit. See section 2.7.2.

5. Pass the serial cable through the cable entrance and locking wire saddle.
   Note: Make sure to pass the cable through the specified locking wire saddle.

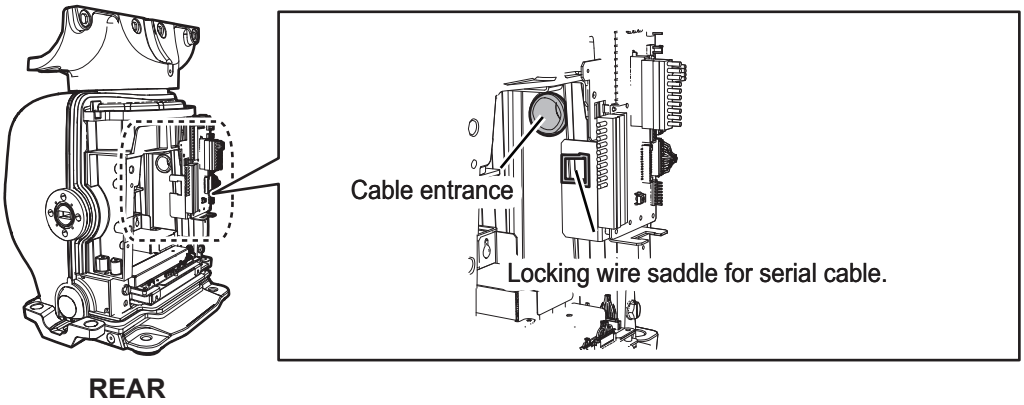

6. Attach the appropriate WAGO connectors (pre-attached) to the serial cable, and then connect the serial cable to the RF-TB Board as shown in the following figure. For how to connect the WAGO connector, see "WAGO connector" on page 2-6. For pin arrangement, see the interconnection diagram at the back of this manual.
   Note: A terminal opener is provided on the RF-TB Board.
   Destination of serial cable
   Serial line: TB802 (8-pin) and TB803 (16-pin)
   Shield (drain wire): Screw (A)

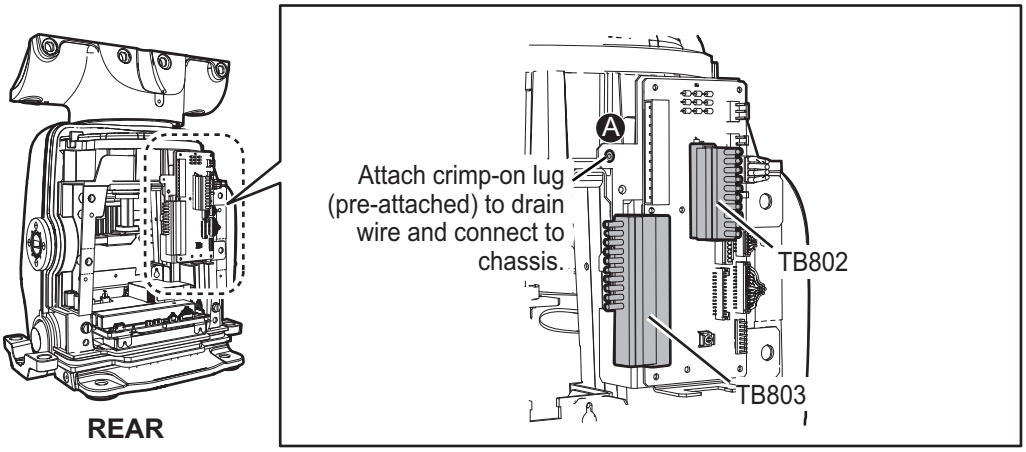

7. **DE-ICER INSTALLATION**. See also “De-icer Kit Installation Instructions” (for TR-DOWN radar, C32-01406), issued separately, for the de-icer not fitted at the factory. If the de-icer is not provided, go to step 8.

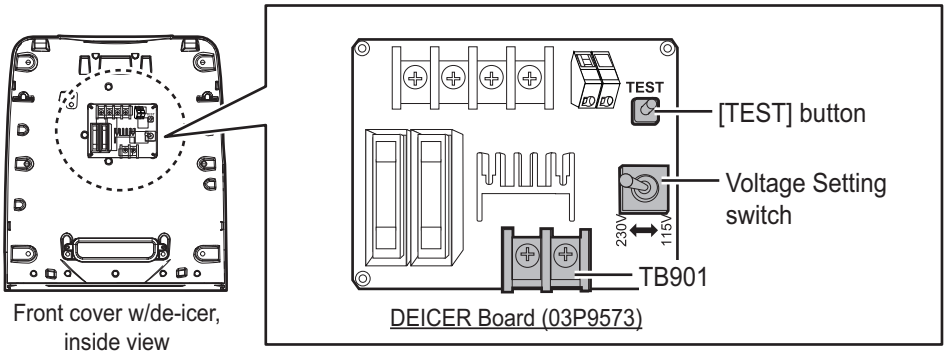

1) Set a locking wire saddle (supplied) at locations (B) and (C) shown in the following figure. Pass the de-icer power cable through the locking wire saddles (A) through (C) and pull it to the front side.

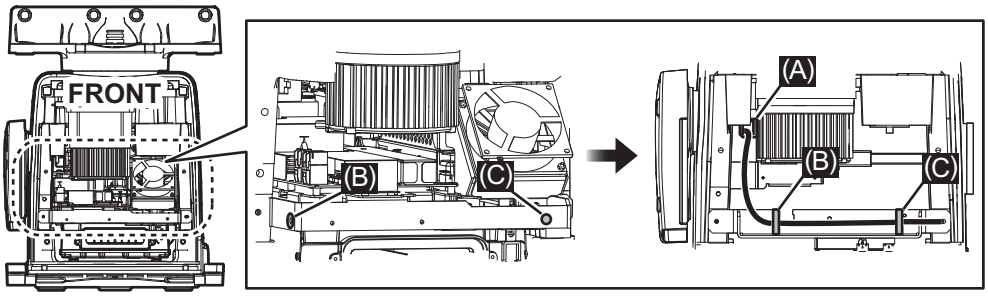

2) Unfasten the cable band* on the front cover. Pass the de-icer power cable through the band then fasten the band. Connect the cable to TB901 on the DE-ICER board (03P9573), using the supplied crimp-on lugs.

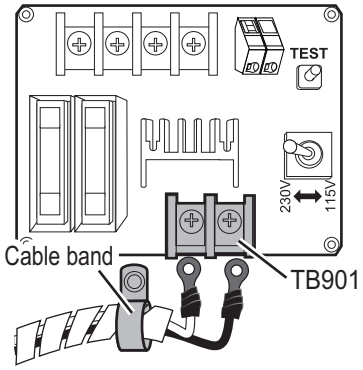

*: For the DE-ICER installation kit, unfasten the cable band on the supplied cover. (The original cover can be discarded.)

3) Set the Voltage Setting switch according to the power source for the de-icer; 115 V or 230 V. The default setting is 230 V.

4) Apply power to the de-icer then press and hold the **TEST** button for about ten seconds. Check that the heater gets hot and then release the **TEST** button.

5) Coat the gasket (all brims) of the intake with the supplied oil compound. Be sure to coat the gasket completely.

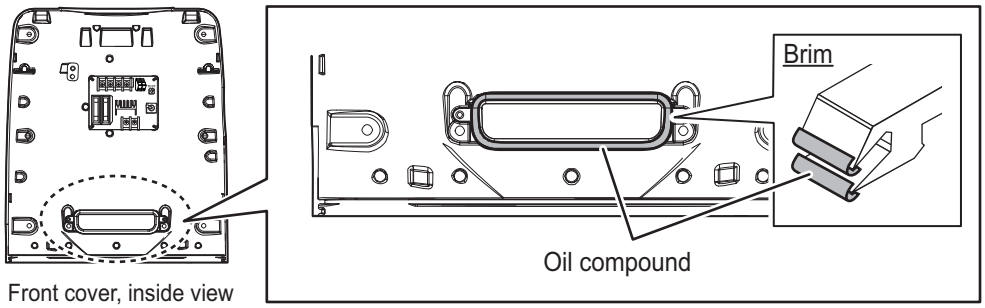

Front cover, inside view

6) Set the front cover to the Antenna Unit. Take care not to hit the heater elements on the chassis or radiator.

7) Fasten the base of the heater as shown in the following figure, using the supplied installation materials.

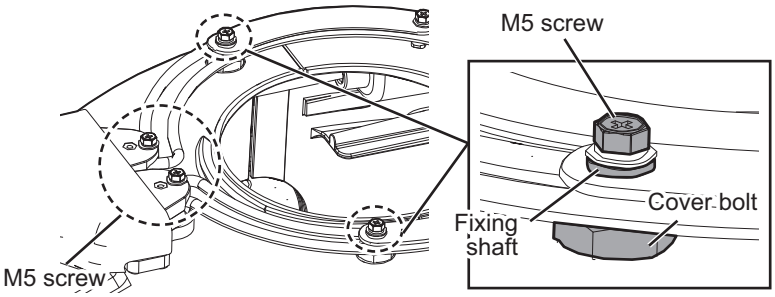

8) Attach the supplied earth label over the earth label currently attached near the grounding terminal.

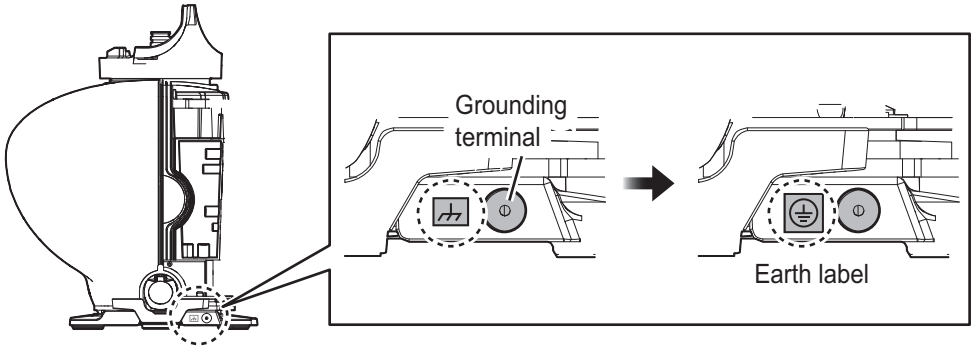

8. Position the cables so their armors lie beneath their respective cable clamps in the cable entrance. Fasten the cable clamps.

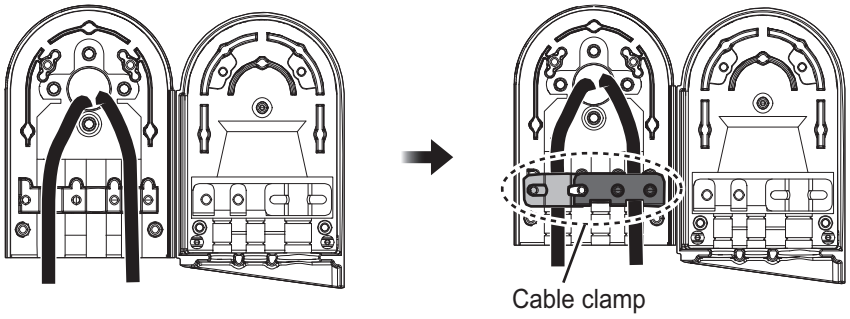

9. Coat the hinge with the supplied adhesive for hinge waterproof then close the cable entrance cover. Fix the cable cover with four screws, then coat the screws with the supplied adhesive.

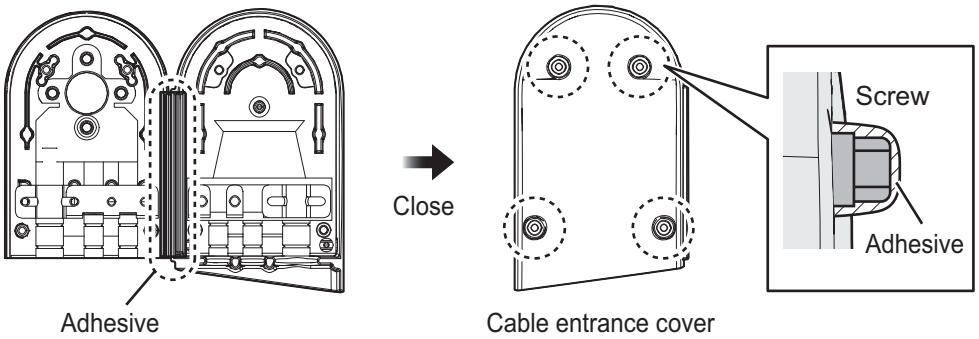

10. Reconnect the performance monitor connector (J807) to the RF-TB Board.

11. Connect the waveguide to the antenna with either an E-bend or H-bend waveguide. See the supplied instruction manual (C32-01903) in Antenna Unit for details.
    1) Wipe the surface of the waveguide flange with a clean, dry cloth to remove any foreign material.
    2) Grease the O-ring and set it in its groove on the Antenna Unit.
    3) Evenly coat the waveguide flange for the Antenna Unit side with supplied adhesive.
       Note: Apply an even coat of the supplied adhesive to the waveguide flange. It should leak out slightly when the fixing bolts are tightened. Be sure no adhesive contacts the choke groove and waveguide.

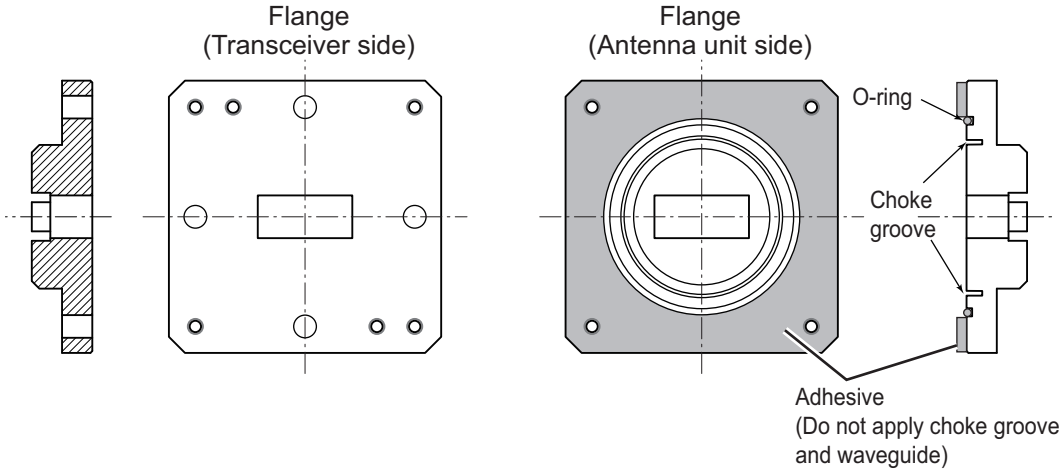

    4) Connect the waveguide flange and then fix with the bolt.
       Note 1: If it is necessary to open the front cover after installing the de-icer kit, remove the de-icer power cable from the locking wire saddle shown in the following figure then detach the cover slowly to prevent damage to the heater element.

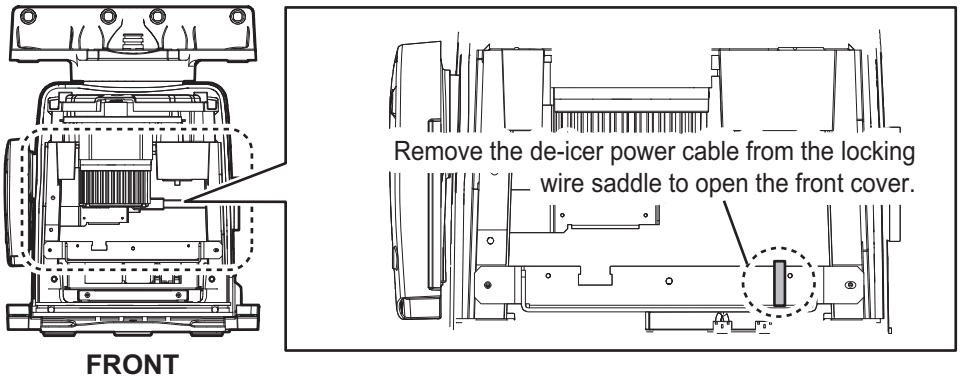

       Note 2: For the de-icer, take care not to hit the heater elements on the chassis or radiator. If the heater hits something, unfasten the fixing screws for the heater to adjust the position of the heater. Then fix the heater again.
    5) Wipe out the excess adhesive of the flange.
12. **Check that the gasket on the front and rear covers is seated properly**, then close the covers. The torque for the fixing bolts must be 10.0 N•m.

2.4 Antenna Unit for S-band, TR-UP Radar

2.4.1 How to fabricate the cables

For how to connect the LAN modular plug, see "LAN cable" on page 2-5. For how to connect the WAGO connector, see "WAGO connector" on page 2-6.

RW-00135

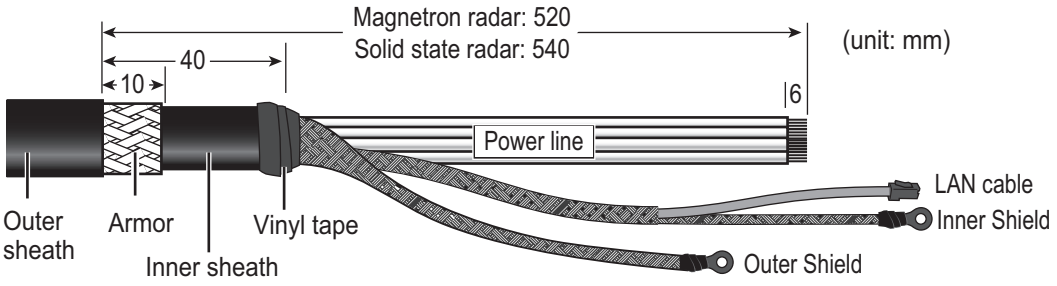

RW-9600/6895 (for retrofit)

To use the existing cable (RW-9600/6895) for the retrofit, two optional kits are required. For the LAN Coaxial Converter, see section 2.10 "LAN Signal Converter" for details.

- LAN Signal Converter: Type: OP03-247-2 (for Magnetron radar)
  Type: OP03-247-1 (for solid state radar)
- Retrofit Cable Kit: Type: OP03-255-1

Note: The maximum antenna cable length is 100 m for RW-9600, 50 m for RW-6895. If the existing antenna cable is longer than the above maximum length, replace the antenna cable with RW-00135.

For cable fabrications and wiring, see the installation manuals in the optional kits.

The unused power lines are tied up and attached to the crimp-on lug FV5.5-S4 (LF), supplied locally. Connect these unused lines to the ground terminal with the shield line. See the interconnection diagram at the back of this manual for details.

S03-92-15/30/40/50 (RW-00136 + connector, for a sub monitor)

Note: The maximum cable length is 50 m.

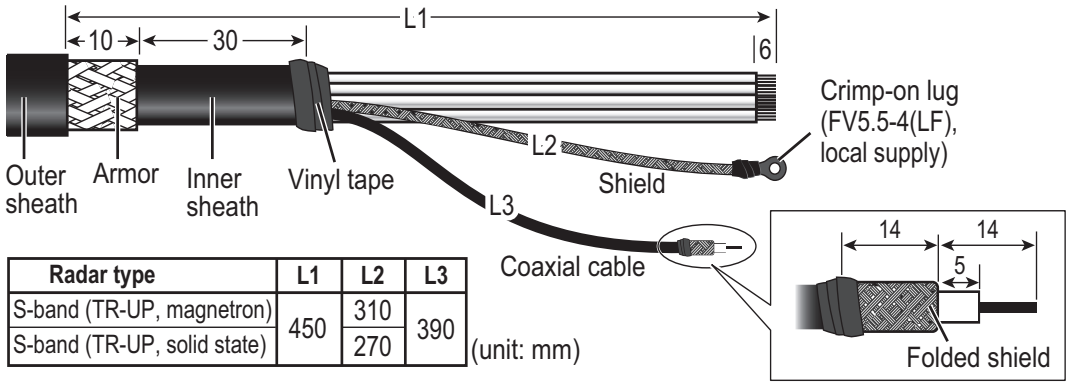

Radar type	L1	L2	L3
S-band (TR-UP, magnetron)	450	310	390
S-band (TR-UP, solid state)		270	

(unit: mm)

DPYCY-1.5 (for the optional de-icer)

- Before beginning any work on the Antenna Unit, turn off the breaker for the de-icer at the mains switchboard. (Turning off the display unit has no effect.)
- The neck of the Antenna Unit becomes VERY HOT when the de-icer is working. (The de-icer turns on when ambient temperature goes down to 5°C and heats to 55°C.)

Wrap the spiral tubing near the crimp-on lugs.

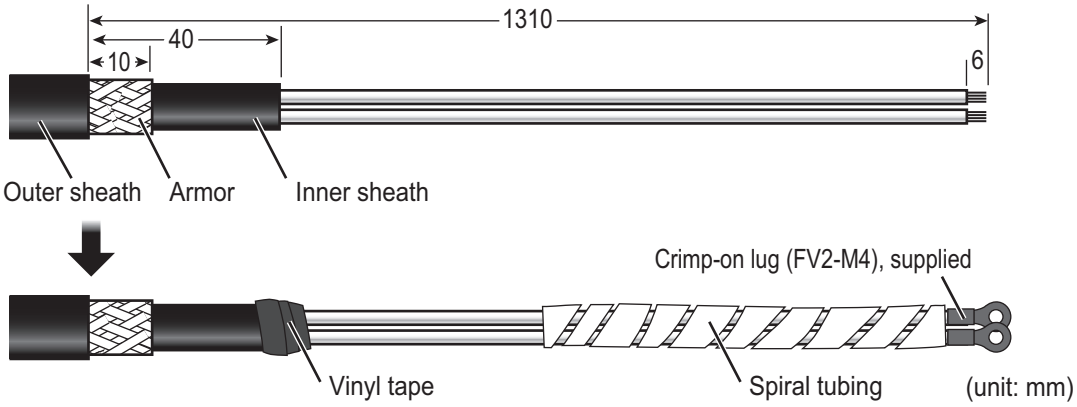

2.4.2 How to connect the cables for S-band (TR-UP, magnetron) radar

Three cables are connected to the Antenna Unit: anttena, sub monitor* and de-icer* power cables (*: option). The procedure shows how to connect all cables. Disregard the descriptions for the optional equipment if not applicable.

Note: Apply the supplied adhesive to the unused cable glands.

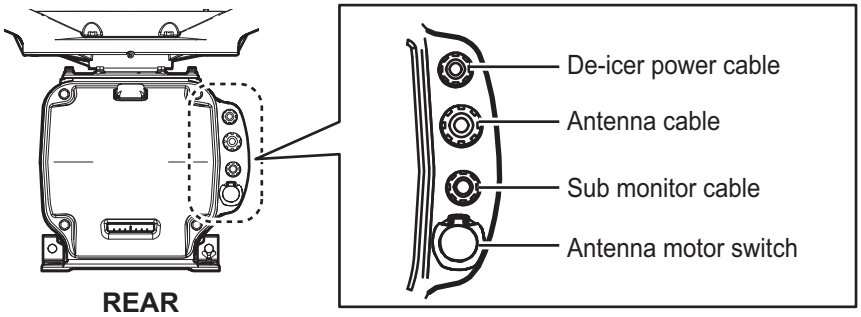

NOTICE

If there is a chance of inclement weather when the RF unit is removed, cover the intakes on both covers with packing tape for waterproofing. Be sure to remove the tape after completing the installation.

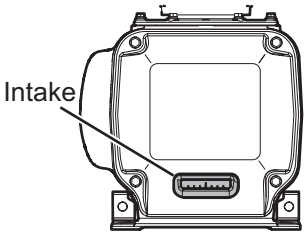

Some parts or wiring have been omitted from the illustrations for clarity.

1. Loosen four bolts on the rear cover to remove the rear cover. If the de-icer is already installed or will be installed, remove also four bolts on the front cover to remove the front cover.

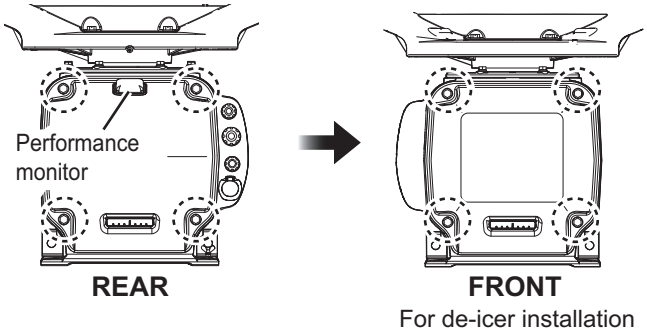

Note: The cable for the performance monitor is connected between the rear cover and the RF-TB Board in the Antenna Unit. Open the cover slowly to prevent damage to the cable and connector.

2. Disconnect the performance monitor connector (J807) and the motor drive connectors (J803, J804 and J808) from the RF-TB Board.

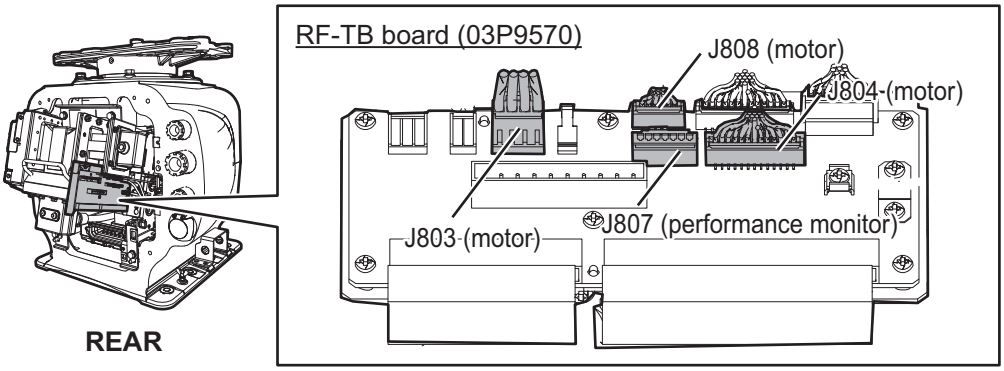

3. Disconnect the coaxial cable and unfasten four bolts to enable removal of the RF unit.

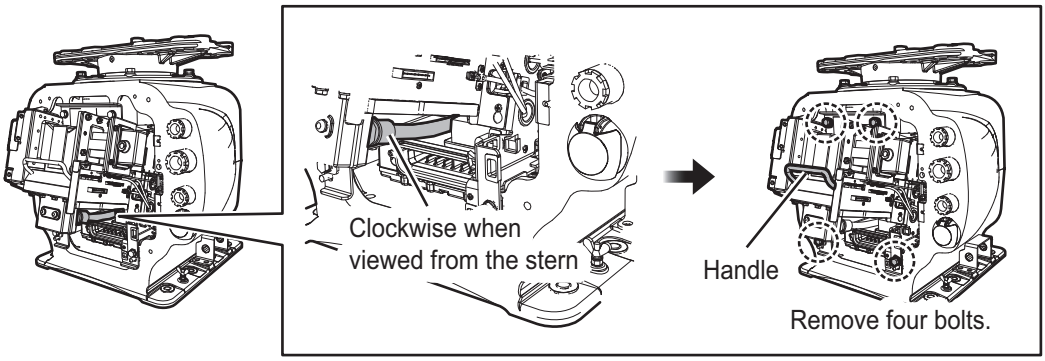

4. Remove the RF unit with the handle.
   Note: Lay the unit on its side or on top of non-ferrous material, to prevent demagnetization.

5. Unfasten the cable gland for the antenna cable and remove the gasket and three flat washers and remove the protector.

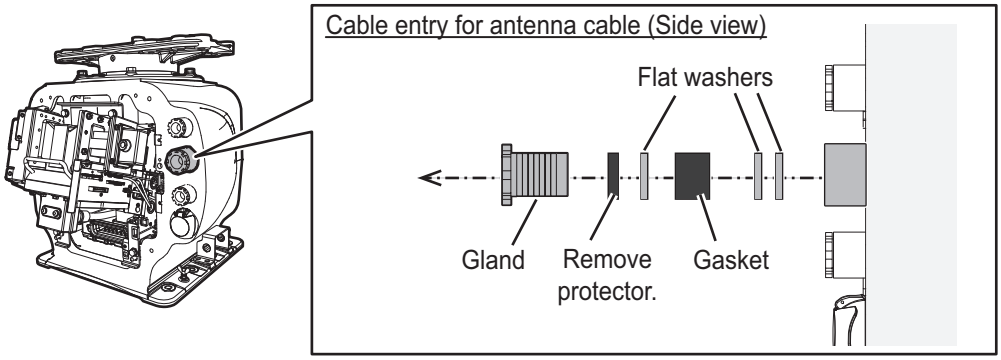

6. Slide the cable gland, the gasket and three flat washers onto the cable.
7. Push the flat washer against the armor.
8. Trim the armor so that it does not extend past the flat washers.

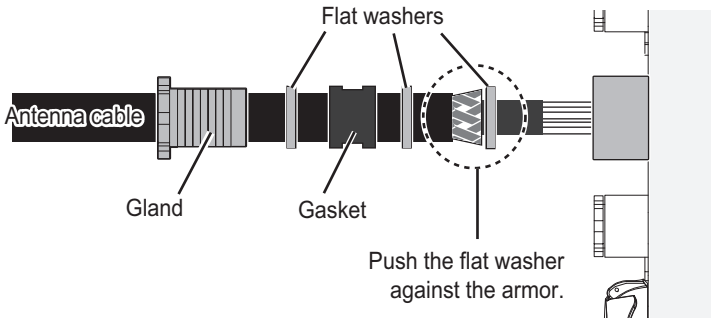

9. Pass the antenna cable through the cable entrance.
   If applicable, unfasten the appropriate cable glands and pass the sub monitor and de-icer power cables through the cable entrance. Pass the cables through their respective locking wire saddle.
10. All other cables are connected to the RF unit and should be pulled out of the chassis after passing them through their respective cable entrances. The de-icer power cable is connected to the de-icer board as shown in step 14.
11. Apply the supplied adhesive to the threads of the cable glands, and then fasten it tightly with the hook spanner.
    Note: Use the wrench of the correct size referring to cable gland size below. If you do not have the hook spanner, contact your dealer.
    - Gland for the antenna cable: ϕ42
    - Gland for the sub monitor cable or de-icer cable: ϕ34
12. Re-mount the RF unit then reconnect the connectors for the motor (J803, J804 and J808), the four bolts and the coaxial cable (see step 3). The torque for fixing the coaxial cable must be 27.5 N•m.
13. Attach the appropriate WAGO connectors (pre-attached) to the appropriate cables, and then connect the antenna and sub monitor cables to the RF-TB Board shown in the following figure. For how to connect the WAGO connector, see "WAGO connector" on page 2-6. For pin arrangement, see the interconnection diagram at the back of this manual.
    Note 1: Make sure to pass the cable through the specified locking wire saddle.
    Note 2: A terminal opener is provided on the RF-TB Board.

- Destination of Antenna cable:
  Power line: TB801 through the locking wire saddle (A)
  LAN cable: J821 through the locking wire saddles (B, two places)
  Shield of power line: Screw (C)
  Shield of LAN cable: Screw (D)

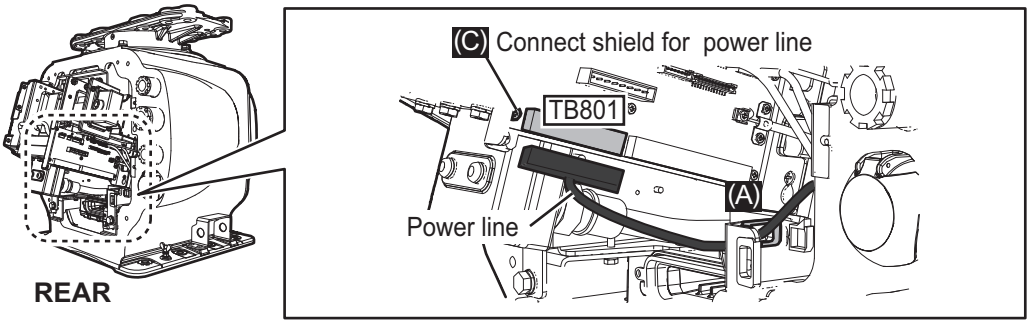

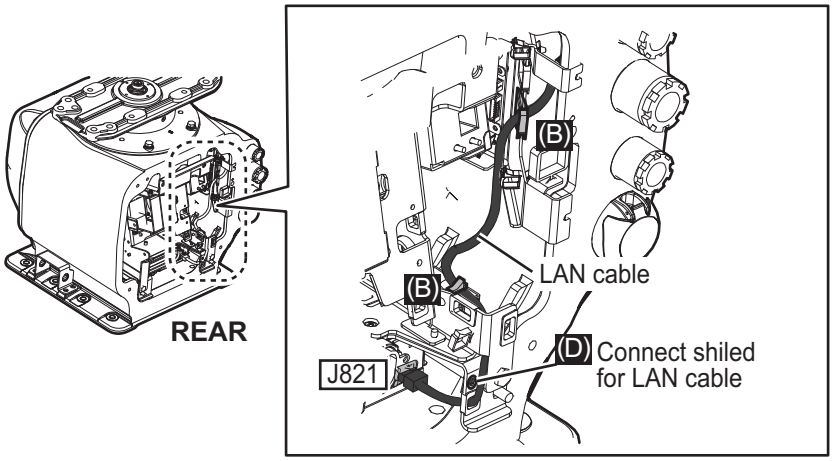

Note: For the antenna cable RW-9600/6895/4873, connect the crimp-on lug (that binds unused wires) together with the shield of the power line.

- Destination of sub monitor cable
  Note: Remove (or Loosen) four bolts as shown in the following figure to remove the RF-TB Board from the RF unit.
  Signal line: TB803 through the locking wire saddle (A), see the figure for the "Destination of Antenna cable:"
  Coaxial cable: TB804 (B)
  Shield of signal line: Screw (C)

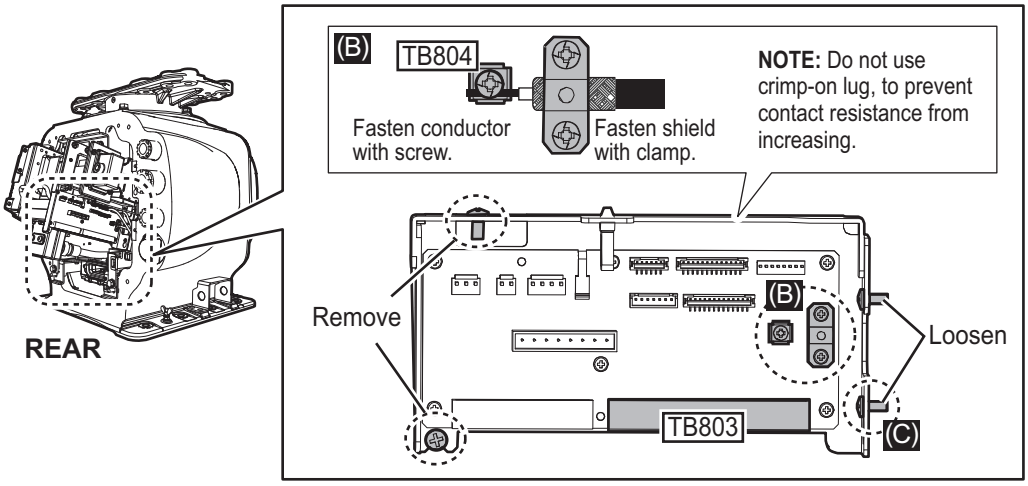

14. **DE-ICER INSTALLATION.** See “De-icer Kit Installation Instructions” (for TR-UP radar, C32-01313), issued separately, for the de-icer not fitted at the factory. If the de-icer is not provided, go to step 12.

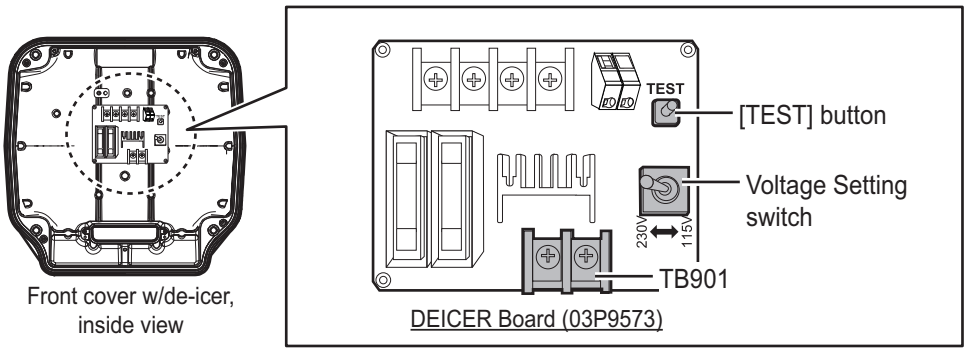

1) Remove four bolts then spread open the right and left heater elements on the front cover.
   Note: Lift the elements slightly when opening so as not hit the elements on the bolts on the chassis.

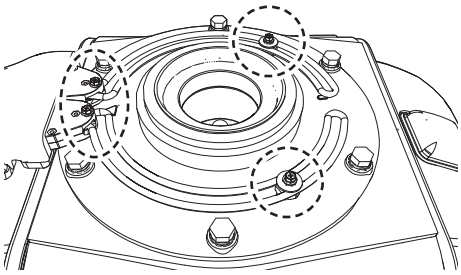

2) Unfasten four bolts to open the front cover. Remove the cover, being careful not to hit the elements on the chassis or radiator.
3) Remove the RF unit then pass the de-icer power cable from the cable entrance.
4) Wrap the supplied spiral tube around the de-icer power cable, starting from the crimp-on lugs. Set a locking wire saddle (supplied) at location (6) shown in the following figure. Pass the de-icer power cable through the locking wire saddles (1) to (6) and it to the front side.

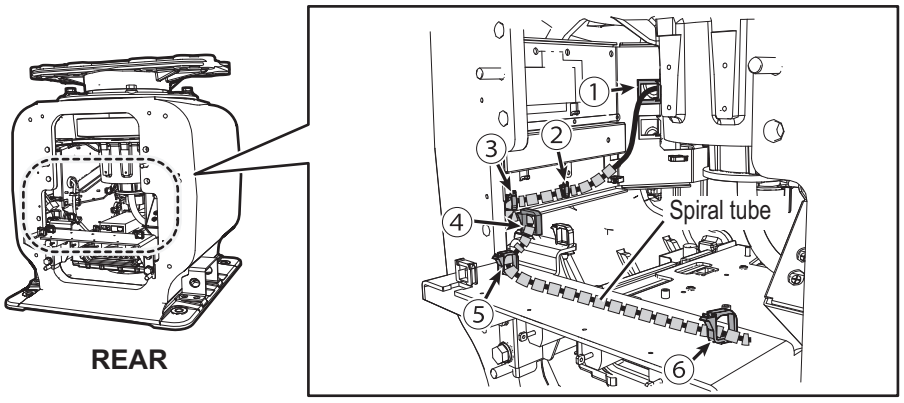

5) Unfasten the cable band* on the front cover. Pass the de-icer power cable through the band then fasten the band. Connect the cable to TB901 on the DE-ICER board (03P9573), using the supplied crimp-on lugs.

   *: For the DE-ICER installation kit, unfasten the cable band on the cover supplied with the kit. (The original cover can be discarded.)

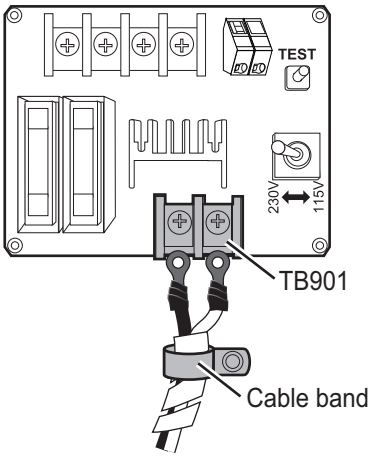

6) Set the Voltage Setting switch according to the power source for the de-icer; 115 V or 230 V. The default setting is 230 V.
7) Apply power to the de-icer then press and hold the **TEST** button for about ten seconds. Check that the heater gets hot and then release the **TEST** button.
8) Set the front cover with heater to the Antenna Unit. When fastening the front cover, spread open the heater elements, lifting the base of the heater. Take care not to hit the heater elements on the chassis or radiator.
9) Fasten the two heater elements to the chassis with removed four bolts at step 1). Fasten the base of the heater with two bolts coated with the supplied adhesive. Fasten the installation materials to each of the cover bolts.

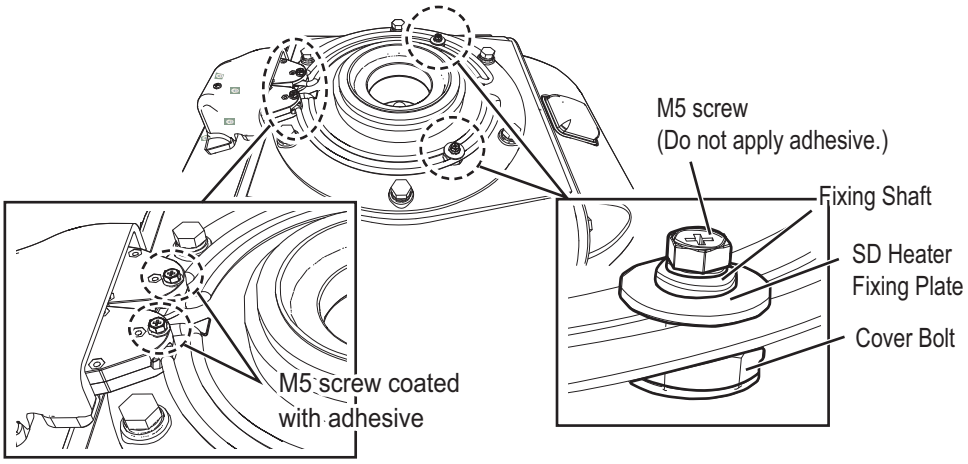

10) Attach the supplied earth label over the earth label currently attached near the grounding terminal.

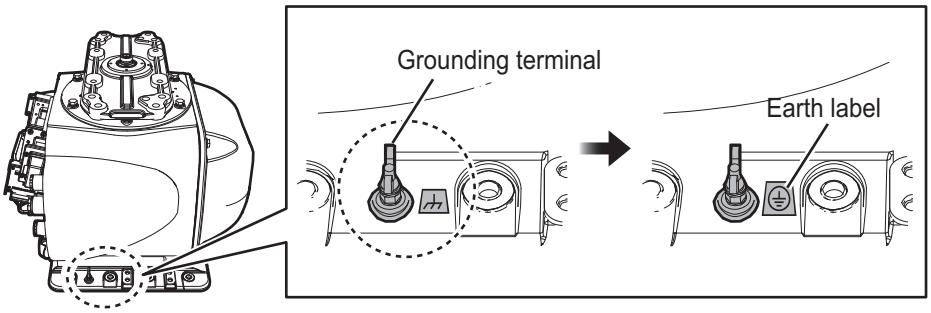

Note: If it is necessary to open the front cover after installing the DE-ICER kit, remove the de-icer power cable from the locking wire saddle shown in the following figure then detach the cover slowly to prevent damage to the heater.

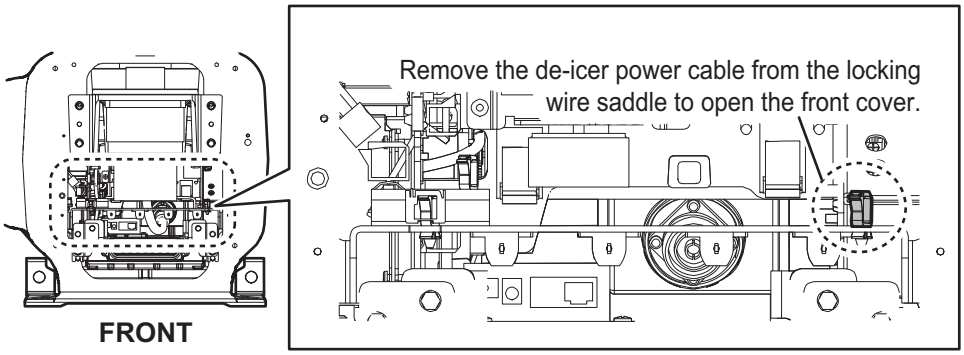

15. Reconnect the performance monitor connector (J807).
16. **Check that the gasket on the front and rear cover is seated properly**, then close the covers. The torque for the fixing bolts must be 28.0 N•m.
    Note: For the de-icer specifications, take care not to hit the heater elements on the chassis or radiator. If the heater hits something, unfasten the fixing screws for the heater to adjust the position of the heater. Then fix the heater again.

2.4.3 How to connect the cables for S-band (TR-UP, solid state) radar

Three cables are connected to the Antenna Unit: anttena, sub monitor* and de-icer* power cables (*: option). The procedure shows how to connect all cables. Disregard the descriptions for the optional equipment if not applicable.

Note: Apply the supplied adhesive to the unused cable glands.

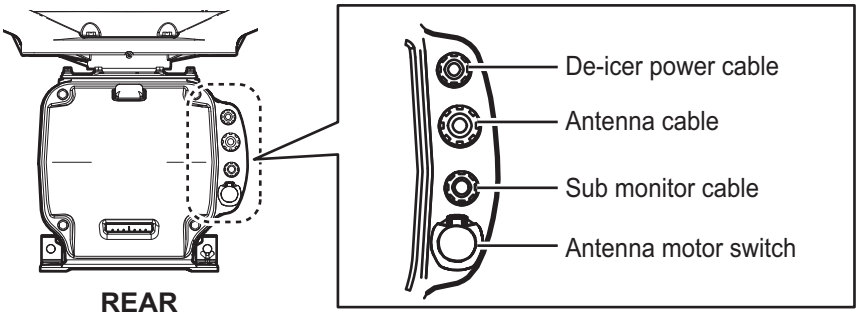

NOTICE

If there is a chance of inclement weather when the RF unit is removed, cover the intakes on both covers with packing tape for waterproofing. Be sure to remove the tape after completing the installation.

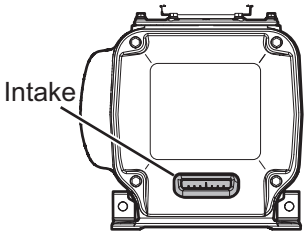

Some parts or wiring have been omitted from the illustrations for clarity.

1. Loosen four bolts on the rear cover to remove the rear cover. If the de-icer is already installed or will be installed, remove also four bolts on the front cover to remove the front cover.

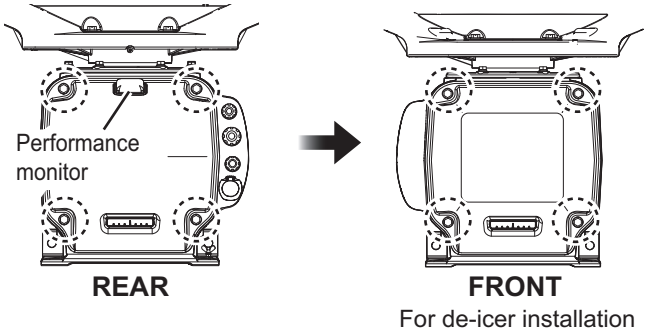

Note: The cable for the performance monitor is connected between the rear cover and the RF-TB Board in the Antenna Unit. Open the cover slowly to prevent damage to the cable and connector.

2. Disconnect the performance monitor connector (J807) and the motor drive connectors (J803, J804 and J808) from the RF-TB Board.

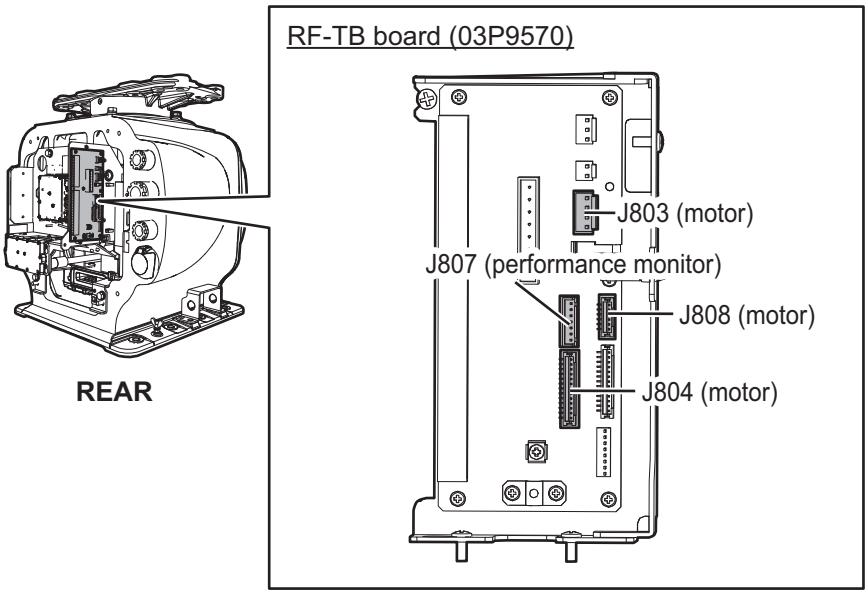

3. Disconnect the coaxial cable and unfasten four bolts to enable removal of the RF unit.

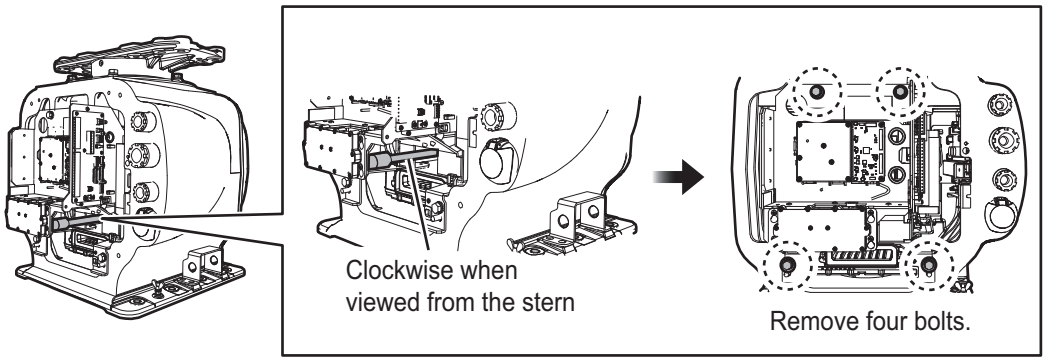

4. Remove the RF unit.

5. Unfasten the cable gland for the antenna cable (RW-00135) and remove the gasket and three flat washers and remove the protector.

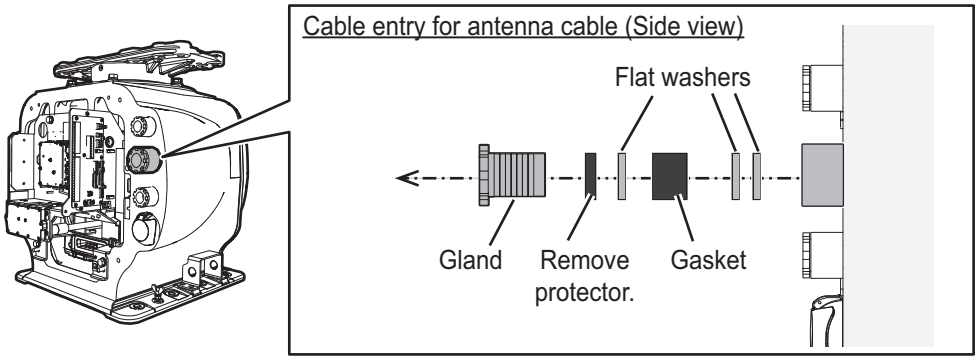

6. Slide the cable gland, the gasket and three flat washers onto the cable.
7. Push the flat washer against the armor.
8. Trim the armor so that it does not extend past the flat washers.

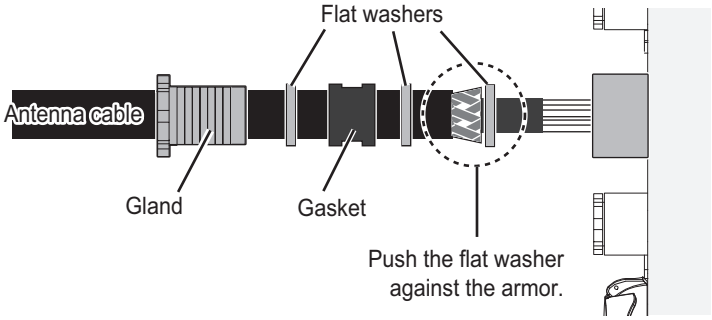

9. Pass the antenna cable through the cable entrance.
   If applicable, unfasten the appropriate cable glands and pass the sub monitor and de-icer power cables through the cable entrance. Pass the cables through their respective locking wire saddle.
10. All other cables are connected to the RF unit and should be pulled out of the chassis after passing them through their respective cable entrances. The de-icer power cable is connected to the de-icer board as shown in step 14.
11. Apply the supplied adhesive to the threads of the cable glands, and then fasten it tightly with the hook spanner.
    Note: Use the wrench of the correct size referring to cable gland size below. If you do not have the hook spanner, contact your dealer.
    - Gland for the antenna cable: ϕ42
    - Gland for the sub monitor cable or de-icer cable: ϕ34
12. Re-mount the RF unit then reconnect the connectors for the motor (J803, J804 and J808), the four bolts and the coaxial cable (see step 3). The torque for fixing the coaxial cable must be 27.5 N•m.
13. Attach the appropriate WAGO connectors (pre-attached) to the appropriate cables, and then antenna and sub monitor cables to the RF-TB Board shown in the following figure. For how to connect the WAGO connector, see "WAGO connector" on page 2-6. For pin arrangement, see the interconnection diagram at the back of this manual.
    Note 1: Make sure to pass the cable through the specified locking wire saddle.
    Note 2: A terminal opener is provided on the RF-TB Board.
    - Destination of Antenna cable:
      Power line: TB801 through the locking wire saddle (A)
      LAN cable: J821 through the locking wire saddles (A and B, two places)
      Shield of power line: Screw (C)

Shield of LAN cable: Screw (D)

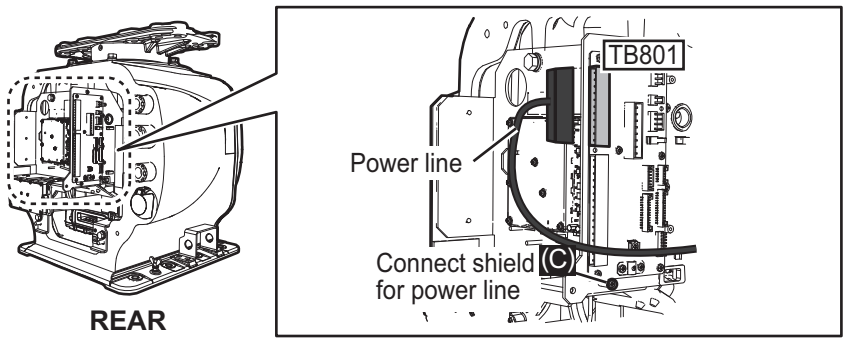

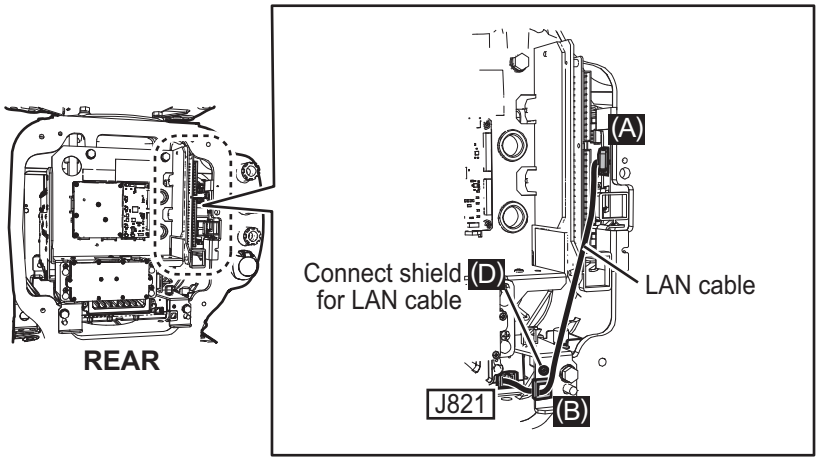

Note: For the antenna cable RW-9600/6895/4873, connect the crimp-on lug (that binds unused wires) together with the shield of the power line.

- Destination of sub monitor cable
  Signal line: TB803 through the locking wire saddle (A), see the figure for the "Destination of Antenna cable:"
  Coaxial cable: TB804 (B)
  Shield of signal line: Screw (C)

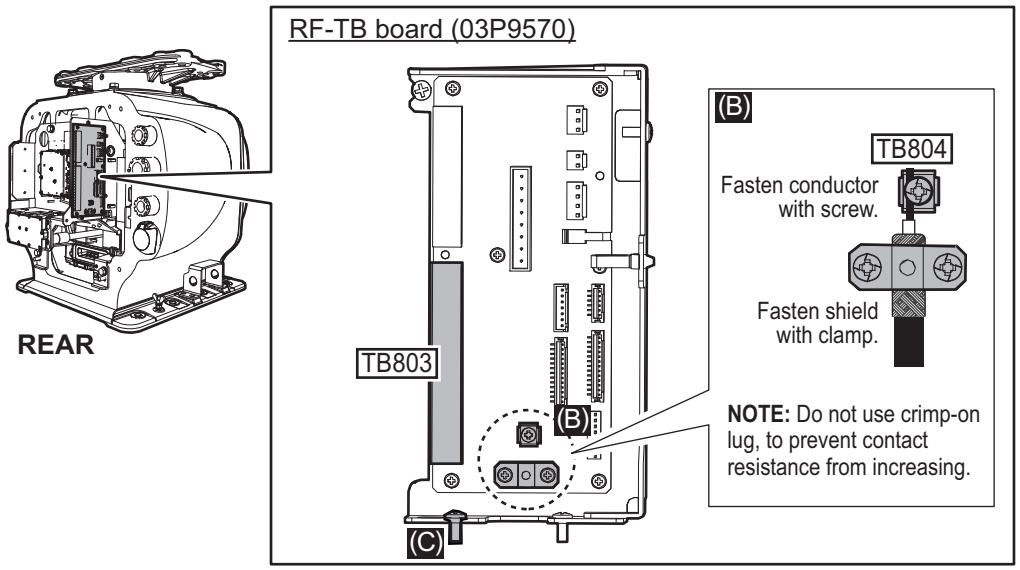

14. **DE-ICER INSTALLATION.** See “De-icer Kit Installation Instructions” (for TR-UP radar, C32-01313), issued separately, for the de-icer not fitted at the factory. If the de-icer is not provided, go to step 12.

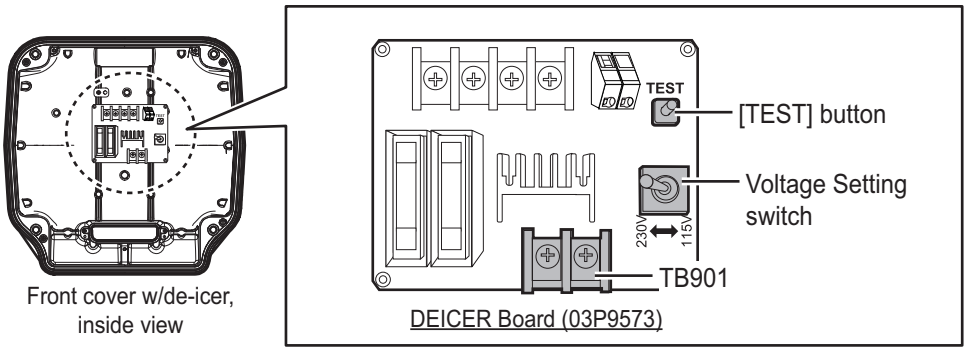

1) Remove four bolts then spread open the right and left heater elements on the front cover.
   Note: Lift the elements slightly when opening so as not hit the elements on the bolts on the chassis.

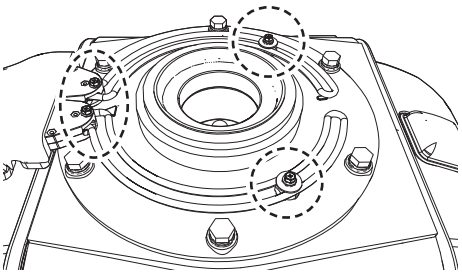

2) Unfasten four bolts to open the front cover. Remove the cover, being careful not to hit the elements on the chassis or radiator.
3) Pass the power cable from the cable entrance.
4) Wrap the supplied spiral tube around the de-icer power cable, starting from the crimp-on lugs. Set a locking wire saddle at location (6) shown in the following figure. Pass the de-icer power cable through locking wire saddles (1) to (6).

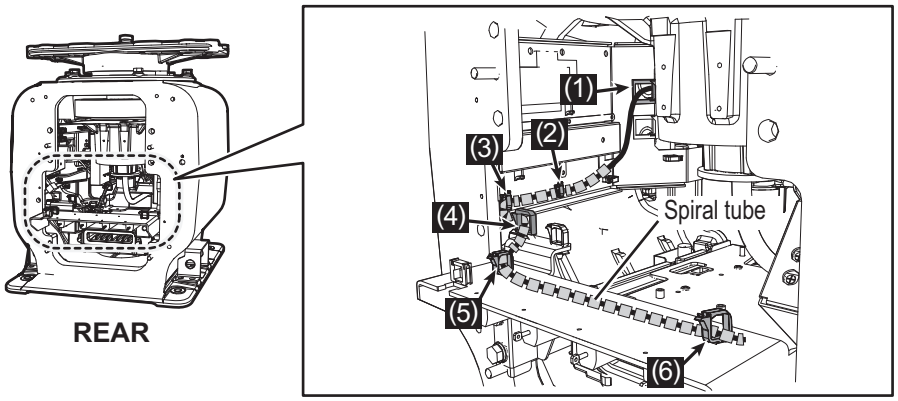

5) Unfasten the cable band* on the front cover. Pass the de-icer power cable through the band then fasten the band. Connect the cable to TB901 on the DE-ICER board (03P9573), using the supplied crimp-on lugs.

   *: For the DE-ICER installation kit, unfasten the cable band on the cover supplied with the kit. (The original cover can be discarded.)

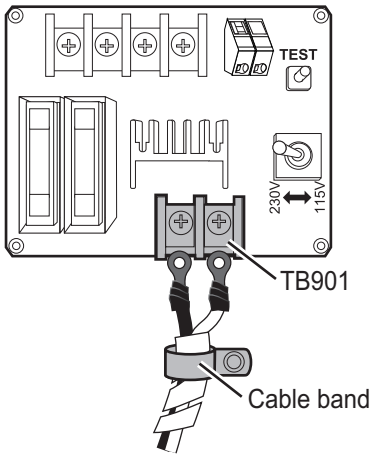

6) Set the Voltage Setting switch according to the power source for the de-icer; 115 V or 230 V. The default setting is 230 V.
7) Apply power to the de-icer then press and hold the **TEST** button for about ten seconds. Check that the heater gets hot and then release the **TEST** button.
8) Set the front cover with heater to the Antenna Unit. When fastening the front cover, spread open the heater elements, lifting the base of the heater. Take care not to hit the heater elements on the chassis or radiator.
9) Fasten the two heater elements to the chassis with removed four bolts at step1). Fasten the base of the heater with two bolts coated with the supplied adhesive. Fasten the installation materials to each of the cover bolts.

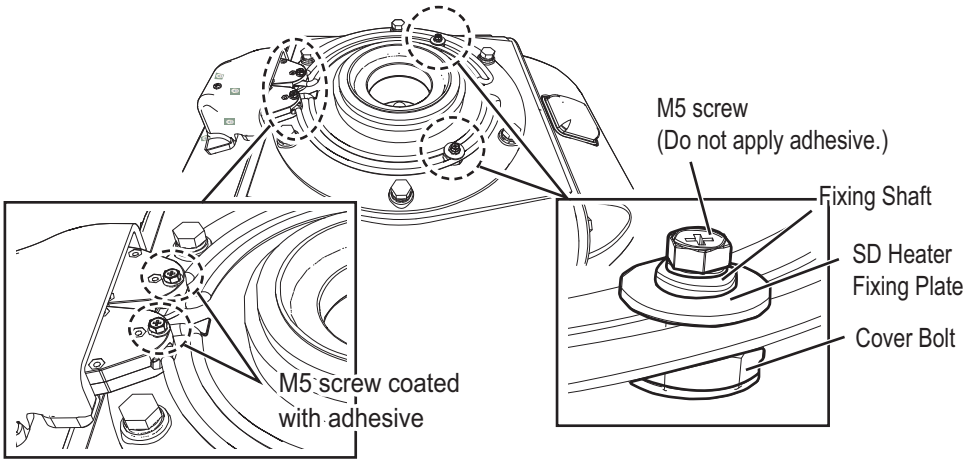

10) Attach the supplied earth label over the earth label currently attached near the grounding terminal.

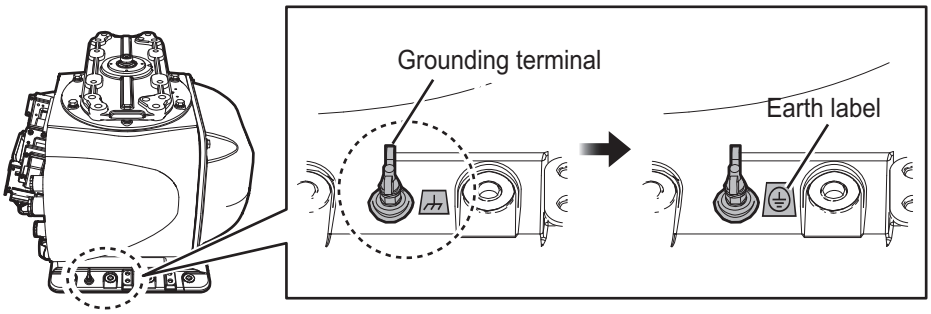

Note: If it is necessary to open the front cover after installing the DE-ICER kit, remove the de-icer power cable from the locking wire saddle shown in the following figure then detach the cover slowly to prevent damage to the heater.

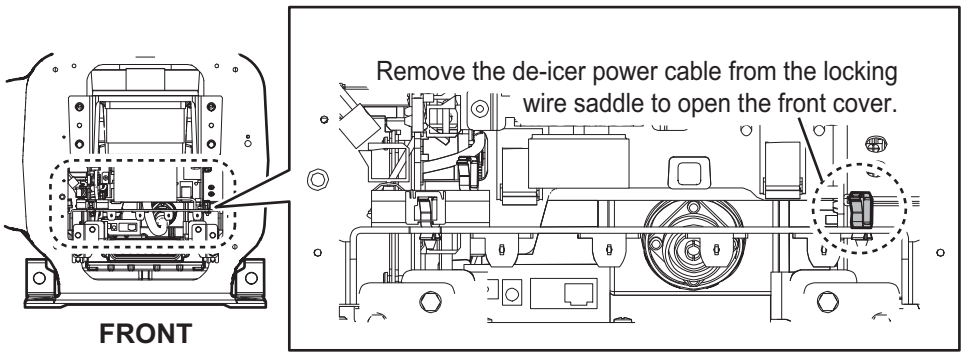

15. Reconnect the performance monitor connector (J807).
16. Check that the gasket on the front and rear cover is seated properly, then close the covers. The torque for the fixing bolts must be 28.0 N•m.
    Note: For the de-icer specifications, take care not to hit the heater elements on the chassis or radiator. If the heater hits something, unfasten the fixing screws for the heater to adjust the position of the heater. Then fix the heater again.

2.5 Antenna Unit for S-band, TR-DOWN Radar

2.5.1 How to fabricate the cables

For how to connect the WAGO connector, see "WAGO connector" on page 2-6.

TTYCYSLA-10 (for serial cable)

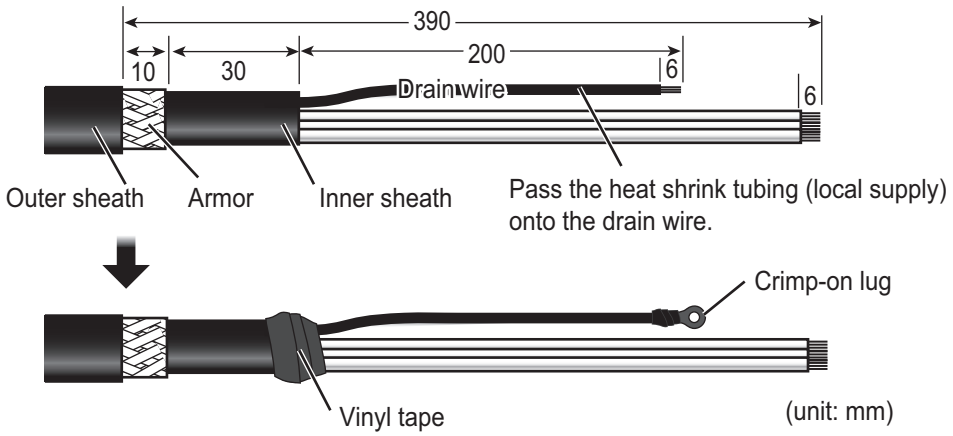

DPYCY-1.5 (for the optional de-icer)

- Before beginning any work on the Antenna Unit, turn off the breaker for the de-icer at the mains switchboard. (Turning off the display unit has no effect.)
- The neck of the Antenna Unit becomes VERY HOT when the de-icer is working. (The de-icer turns on when ambient temperature goes down to 5°C and heats to 55°C.)
  Wrap the spiral tubing near the crimp-on lugs.

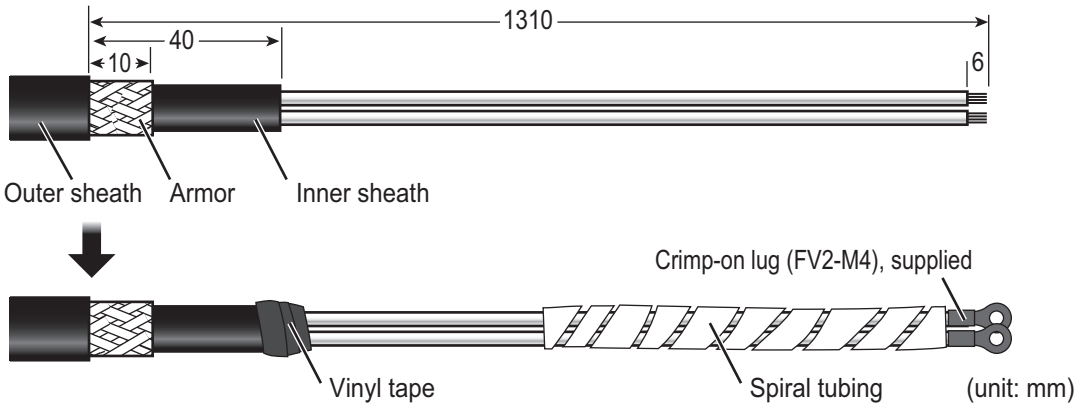

Microwave coaxial cable

See the supplied instruction manual (C32-01904) in Antenna Unit for details.

2.5.2 How to connect the cables for S-band (TR-DOWN) radar

Three cables are connected to the Antenna Unit: serial cable from the transceiver unit, microwave coaxial cable and de-icer power cable (option). The procedure shows how to connect all cables. Disregard the descriptions for the optional equipment if not applicable.

Note: Apply the supplied adhesive to the unused cable glands.

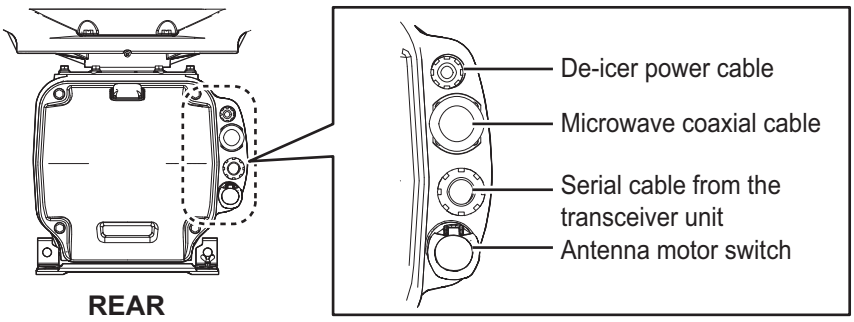

Some parts or wiring have been omitted from the illustrations for clarity.

1. Loosen four bolts on the rear cover to remove the rear cover. If the de-icer is already installed or will be installed, remove also four bolts on the front cover to remove the front cover.

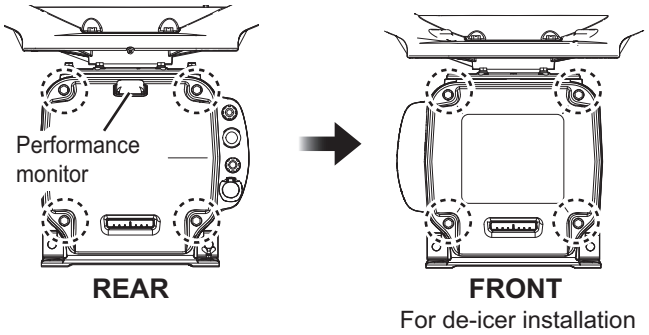

Note: The cable for the performance monitor is connected between the rear cover and the RF-TB Board in the Antenna Unit. Open the cover slowly to prevent damage to the cable and connector.

2. Disconnect the performance monitor connector (J807) from the RF-TB Board.

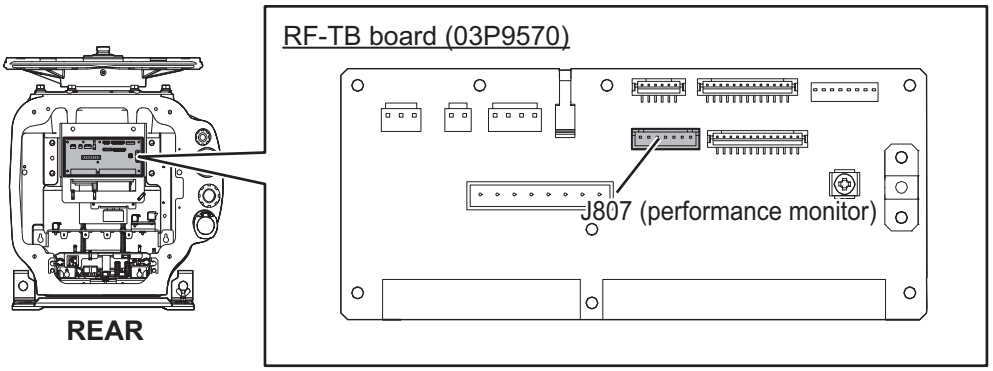

3. Unfasten the cable gland for the serial cable (TTYCSLA-10) and remove the gasket and three flat washers and remove the protector.

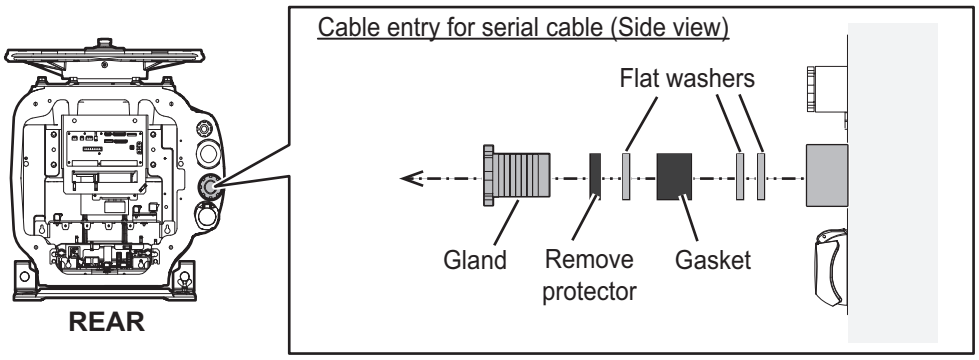

4. Slide the cable gland, the gasket and three flat washers onto the cable.
5. Push the flat washer against the armor.
6. Trim the armor so that it does not extend past the flat washers.

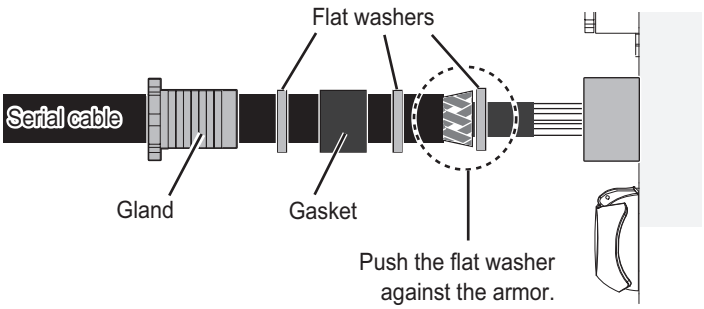

7. Pass the serial cable through the cable entrance.
   If applicable, unfasten the appropriate cable gland and pass the de-icer power cable through the cable entrance. Pass the cable through appropriate locking wire saddle.
8. Apply the supplied adhesive to the threads of the cable glands, and then fasten it tightly with the hook spanner.
   Note: Use the wrench of the correct size referring to cable gland size below. If you do not have the hook spanner, contact your dealer.
   - Gland for the antenna cable: ϕ42
   - Gland for the sub monitor cable or de-icer cable: ϕ34
9. Attach the appropriate WAGO connectors to the serial cable, and then connect the serial cable to the RF-TB Board as shown in the following figure. For how to connect the WAGO connector, see "WAGO connector" on page 2-6. For pin arrangement, see the interconnection diagram at the back of this manual.
   Note 1: Make sure to pass the cable through the specified locking wire saddle.
   Note 2: A terminal opener is provided on the RF-TB Board.
   - Destination of serial cable:
     Serial line: TB802 (8-pin) and TB803 (16-pin) through the locking wire saddle (A)
     Shield of serial line: Screw (C)

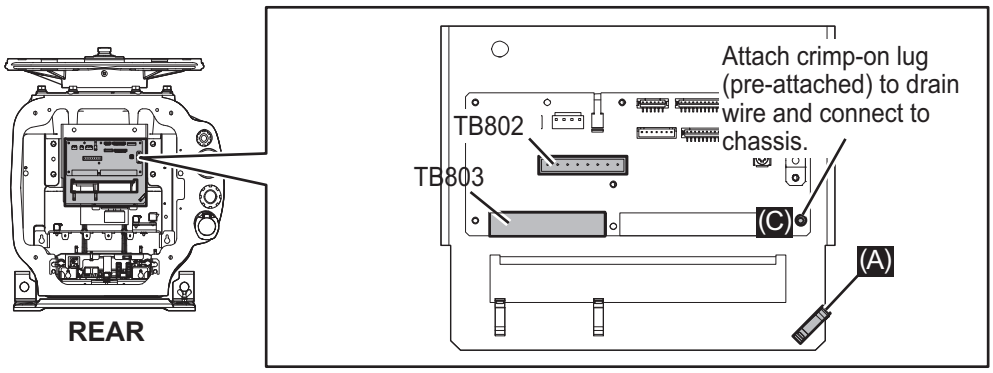

10. **DE-ICER INSTALLATION.** See “De-icer Kit Installation Instructions” (for TR-DOWN radar, C32-01406), issued separately, for the de-icer not fitted at the factory. If the de-icer is not provided, go to step 12.

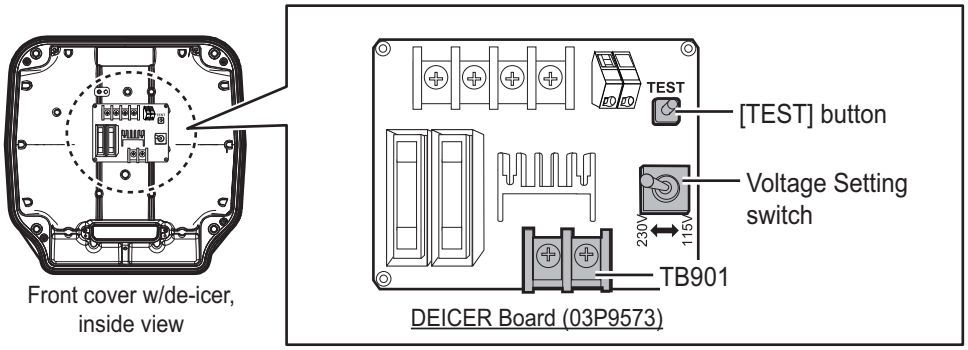

1) Remove four bolts then spread open the right and left heater elements on the front cover.

   Note: Lift the elements slightly when opening so as not hit the elements on the bolts on the chassis.

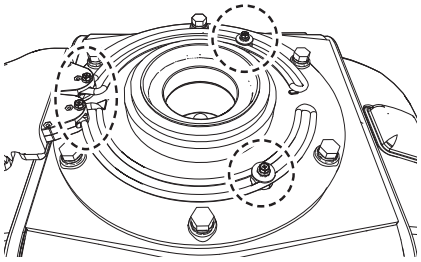

2) Unfasten four bolts to open the front cover. Remove the cover, being careful not to hit the elements on the chassis or radiator.
3) Unfasten two bolts to remove the RF-TB assembly, then pass the de-icer power cable through the cable entrance.

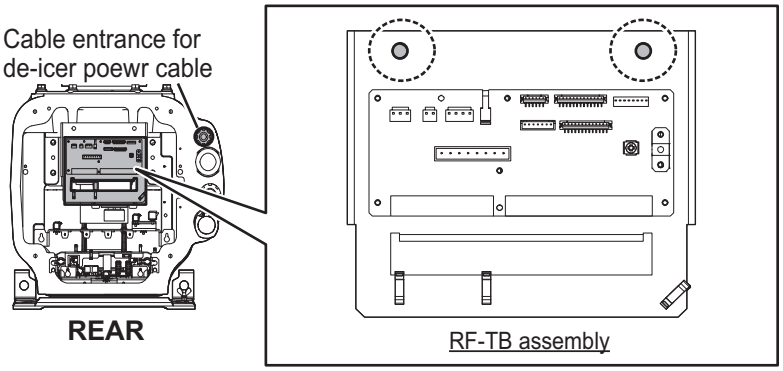

4) Wrap the supplied spiral tube around the de-icer power cable, starting from the crimp-on lugs. Set a locking wire saddle (supplied) at location (5) shown in the following figure. Pass the de-icer power cable through the locking wire saddles (1) to (5) and it to the front side.

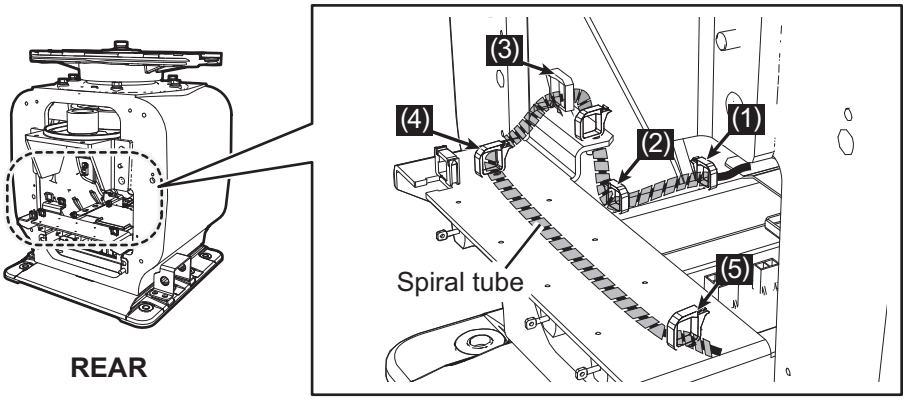

5) Unfasten the cable band* on the front cover. Pass the de-icer power cable through the band then fasten the band. Connect the cable to TB901 on the DE-ICER board (03P9573), using the supplied crimp-on lugs.

   *: For the DE-ICER installation kit, unfasten the cable band on the cover supplied with the kit. (The original cover can be discarded.)

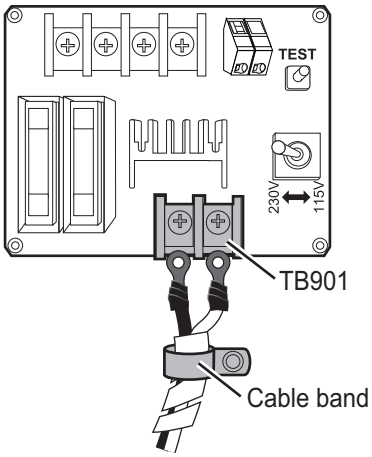

6) Set the Voltage Setting switch according to the power source for the de-icer; 115 V or 230 V. The default setting is 230 V.

7) Apply power to the de-icer then press and hold the **TEST** button for about ten seconds. Check that the heater gets hot and then release the **TEST** button.

8) Set the front cover with heater to the Antenna Unit. When fastening the front cover, spread open the heater elements, lifting the base of the heater. Take care not to hit the heater elements on the chassis or radiator.

9) Fasten the two heater elements to the chassis with removed four bolts at step 1). Fasten the base of the heater with two bolts coated with the supplied adhesive. Fasten the installation materials to each of the cover bolts.

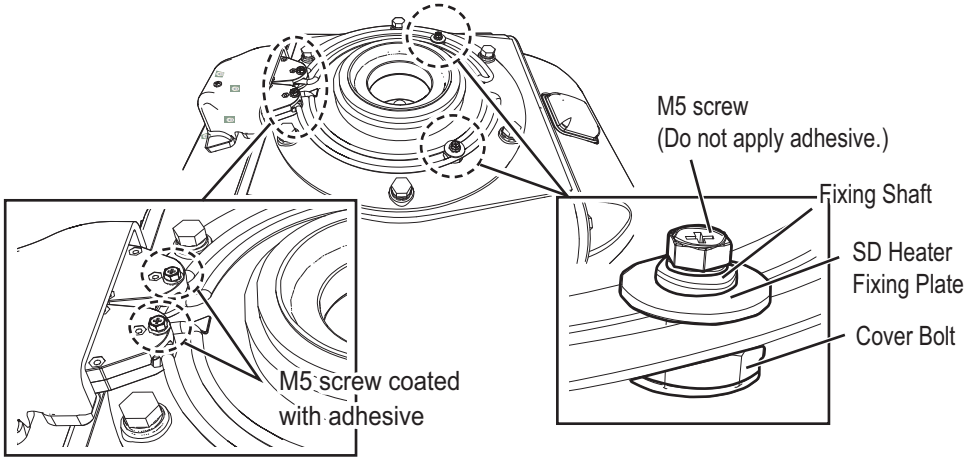

10) Attach the supplied earth label over the earth label currently attached near the grounding terminal.

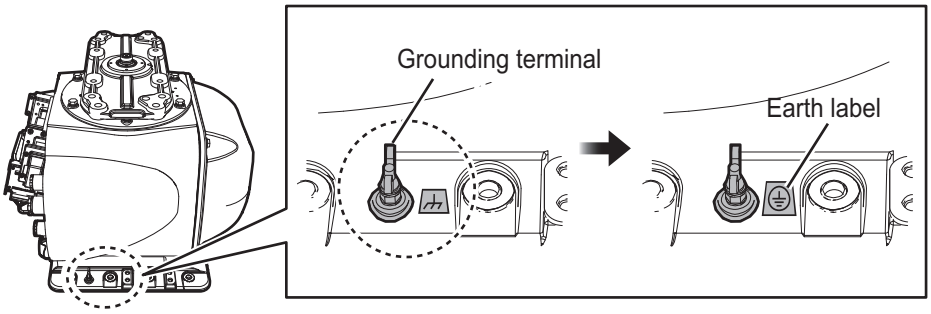

Note: If it is necessary to open the front cover after installing the DE-ICER kit, remove the de-icer power cable from the locking wire saddle shown in the following figure then detach the cover slowly to prevent damage to the heater.

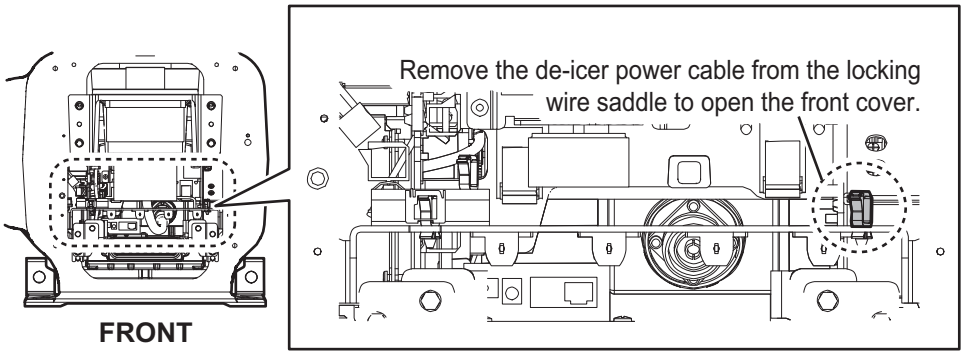

11. Coat the O-ring in the gland for the microwave coaxial cable with silicon grease.
12. Coat the mating surface between the coaxial connector of the cable and the waveguide flange on the Antenna Unit with the supplied waterproofing compound.
    Note: Do not coat the O-ring with the waterproofing compound.
13. Fasten the coaxial connector to the waveguide flange with three sets of M6×20 hex bolts, M6 spring washers and M6 nuts.

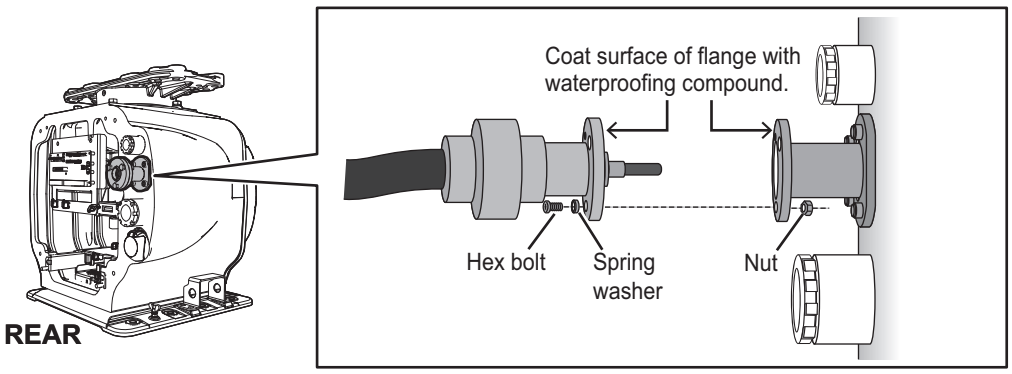

14. Tape the cable with two or more turns of self-bonding tape then wrap with PVC tape.

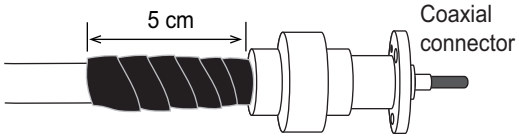

15. Secure the cable with fixing bands (supplied) or the optional clamping metal (Type: 03-011-3228, Code no.: 100-049-620) to the mast and to the wheelhouse structure. For the optional through-deck cable gland, see the outline drawing at the back of this manual.

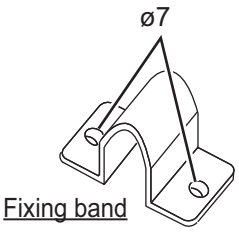

16. Reconnect the performance monitor connector (J807).
17. Check that the gasket on the front and rear cover is seated properly, then close the covers. The torque for the fixing bolts must be 28.0 N•m.
    Note: For the de-icer specifications, take care not to hit the heater elements on the chassis or radiator. If the heater hits something, unfasten the fixing screws for the heater to adjust the position of the heater. Then fix the heater again.

2.6 Power Supply Unit

2.6.1 How to fabricate cables

For locations of cables and cores, see the sticker on the reverse side of the top cover. (All dimensions in millimeters)

For how to connect the LAN modular plug, see "LAN cable" on page 2-5. For how to connect the WAGO connector, see "WAGO connector" on page 2-6.

RW-0013/RW-0030/03CA00099 (for Antenna cable)

<RW-0013/03CA00099>

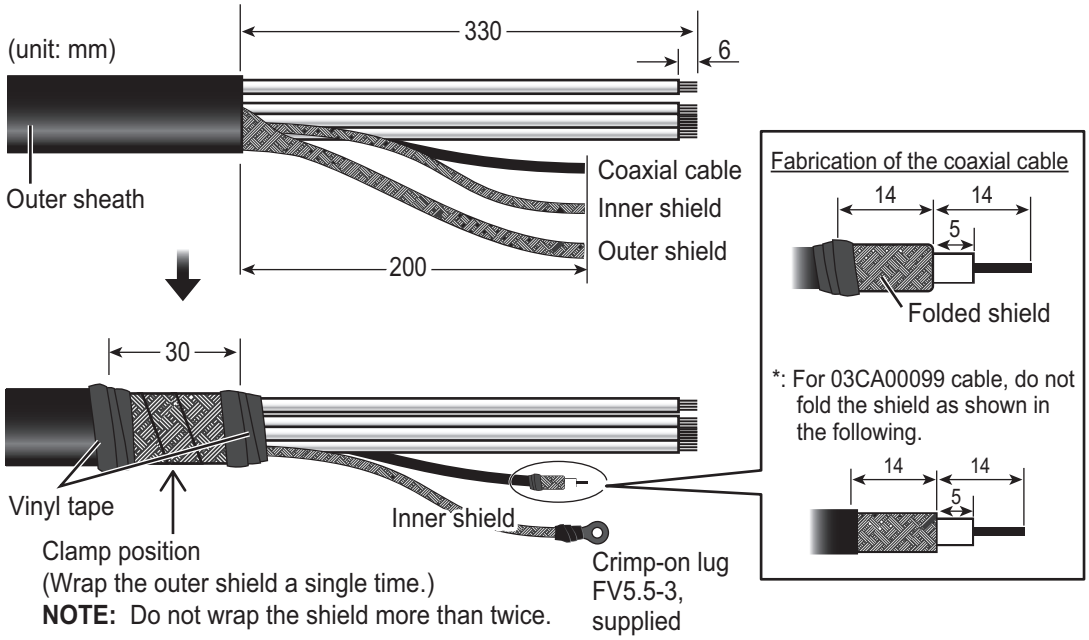

<RW-0030>

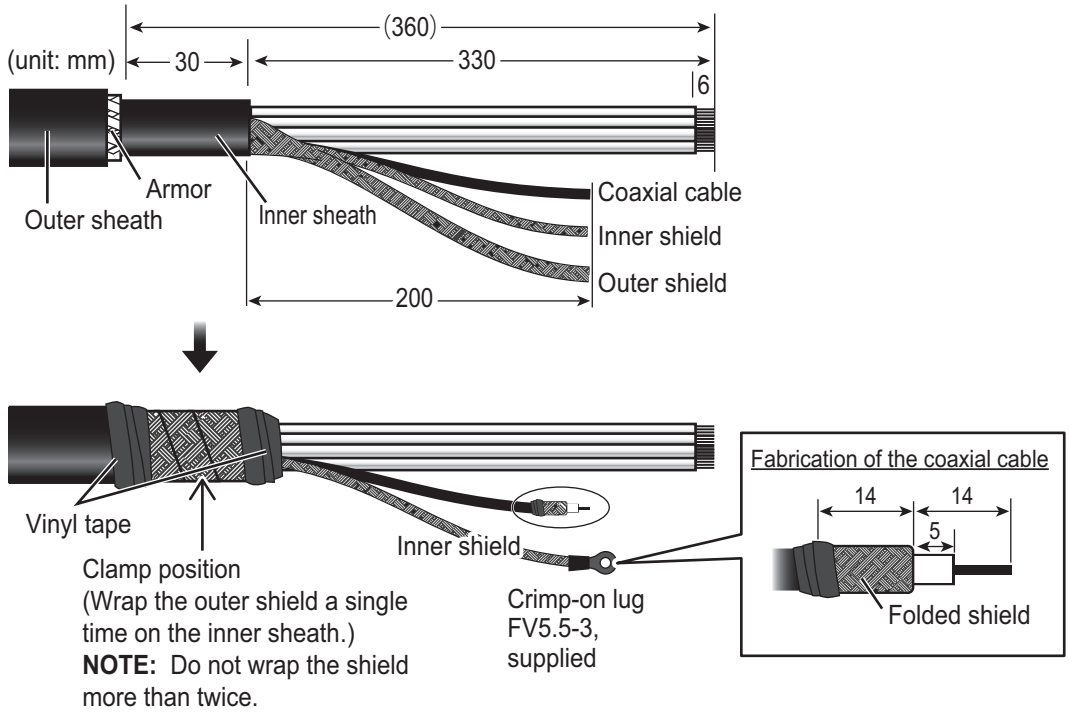

TPYCY-2.5 (for Motor power cable)

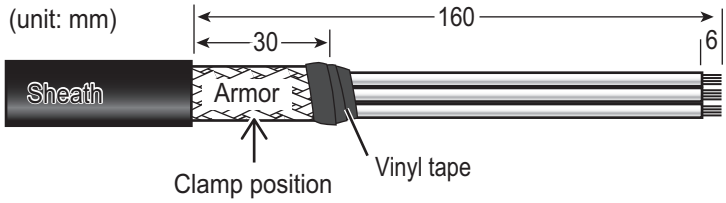

DPYC-2.5 cable (for Power)

Clamp the sheath with the cable clamp.

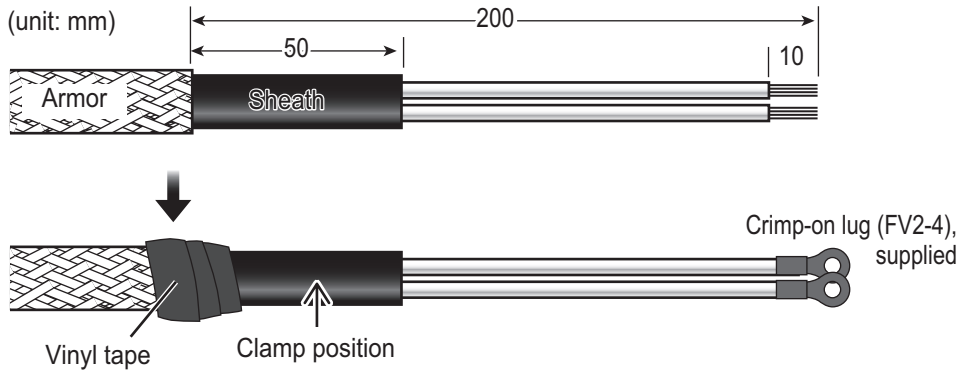

RW-00339 (for Processor Unit)

The end of the cable RW-00339 which connects to the Power Supply Unit is prefabricated. Clamp the cable at the outer shield which is wrapped on the outer sheath.

RW-4864/00136 (for sub monitor)

The ends of the sub monitor cable are prefabricated. Clamp the cable at the outer shield.

2.6.2 How to connect cables inside the Power Supply Unit

Connect the ground wire between the ground terminal on the chassis and the ship's earth.

Note 1: If the Processor Unit is turned on, turn it off before wiring of the Power Supply Unit.

Note 2: Turn the main switch of the Processor Unit off before turning the Power Supply Unit off.

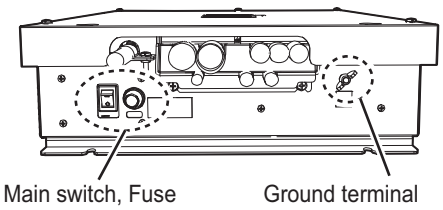

How to open/close the top cover

Unfasten five screws (M4×8) to open the top cover from the Processor Unit.

After the appropriate cable connections are completed, fasten five screws to close the top cover.

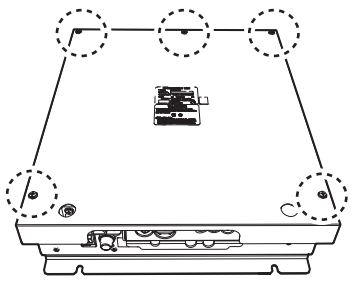

Cable entrance

There are two layers at the cable entrance on the front side of the Power Supply Unit, upper and lower entrances. Remove the six M4 screws of total to set the cables on the cable entrances.

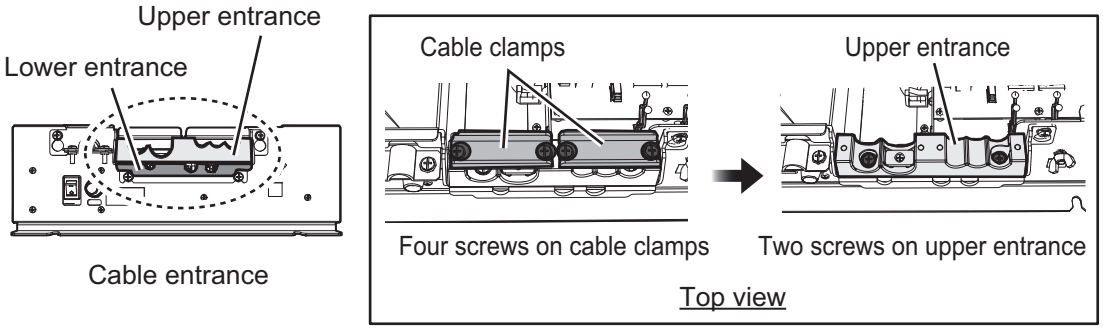

The lane for each cable is as shown below, referring to the Wiring Label attached on the reverse side of the top cover.

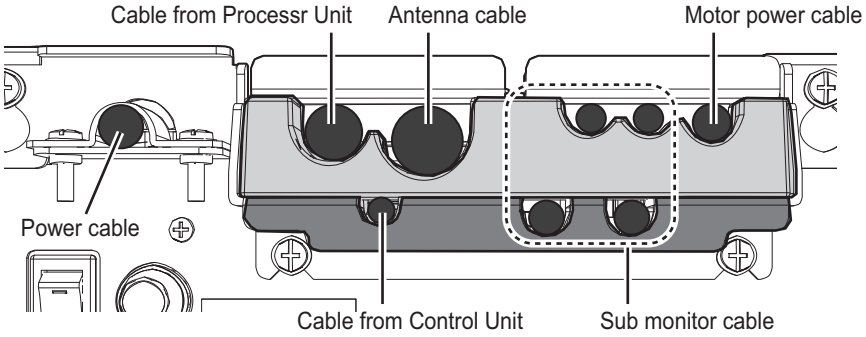

Connection of Antenna cable

1. Connect the lines of the cable to the appropriate WAGO connectors (TB701, TB702 and TB703), referring to the interconnection diagram at the back of this manual.
2. Set the antenna cable on the upper cable entrance as follows, then fasten the shield part of the antenna cable with the cable clamp. For the clamp position, see "RW-0013/RW-0030/03CA00099 (Antenna cable for FAR-2x58 radars)" on page 2-7.
   Note: For the antenna cable 03CA00099, remove the shim plate from the cable entrance before passing the cable.

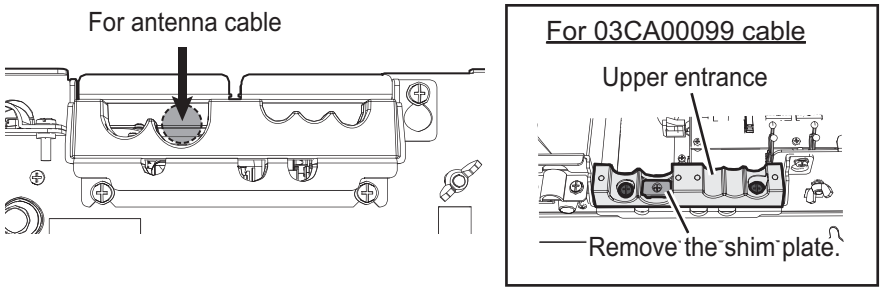

3. Connect each line of the cable to the appropriate connectors on 03P9668 board.
   - Serial lines: TB701, TB702 and TB703, through the wiring clamp (A)
   - Shield line: Screw (C)
   - Coaxial cable: J716 through the wiring clamp (D). Then clamp the shield part of the coaxial cable with the cable clamp (E).

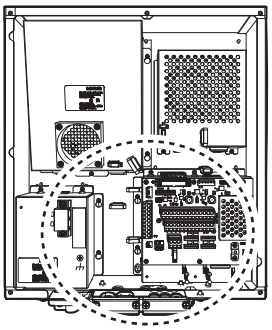

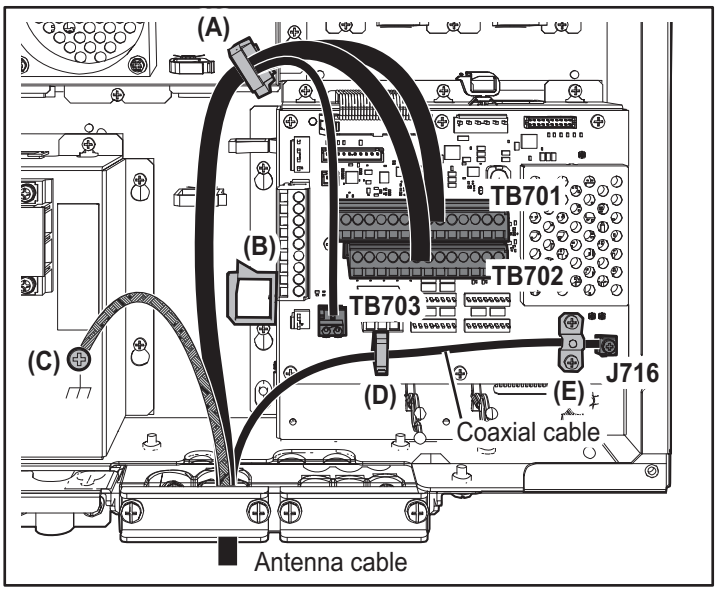

Connection of Motor power cable (From Antenna Unit)

1. Connect the lines of the cable to the appropriate WAGO connectors (TB713), referring to the interconnection diagram at the back of this manual.
2. Set the motor power cable on the upper cable entrance, and fasten the armor part of the antenna cable with the cable clamp. For the clamp position, see "TPYCY-2.5 (for Motor power cable)" on page 2-48.

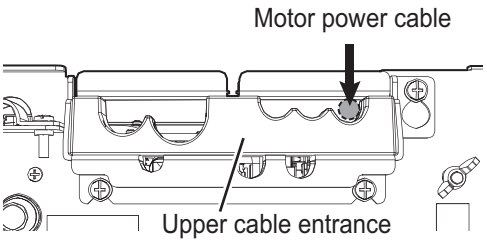

3. Connect the lines of the Motor power cable as follows:
   - Serial lines: TB713. Clamp the armor part of the cable with the cable clamp.
     Note: Twist the motor power cable once to handle extra length.

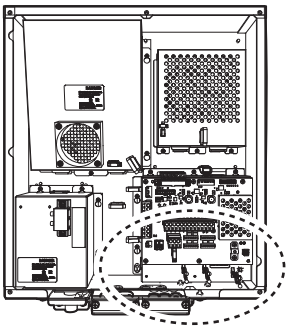

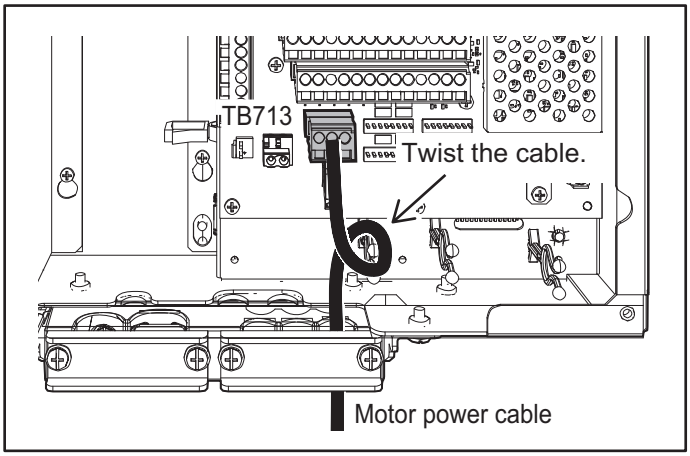

Connection of Power cable

1. Loosen four screws on the front plate, then unfasten two screws on the cable clamp to set the power cable.

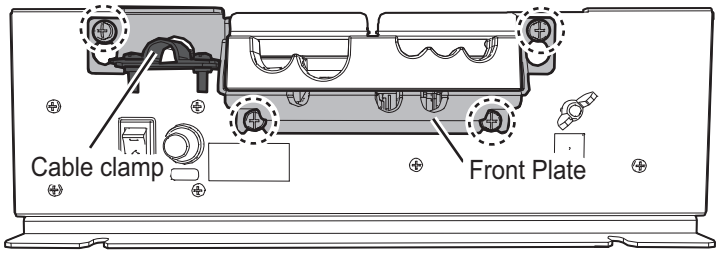

2. Set the power cable on the cable entrance, and fasten the sheath part of the power cable with the cable clamp. For the clamp position, see "DPYC-2.5 cable (for Power)" on page 2-48.
3. Remove the plastic cover on TB1 to pass the power cable.
4. Connect the cable to TB1 with the pre-attached crimp-on lugs, referring to the wiring label near TB1.

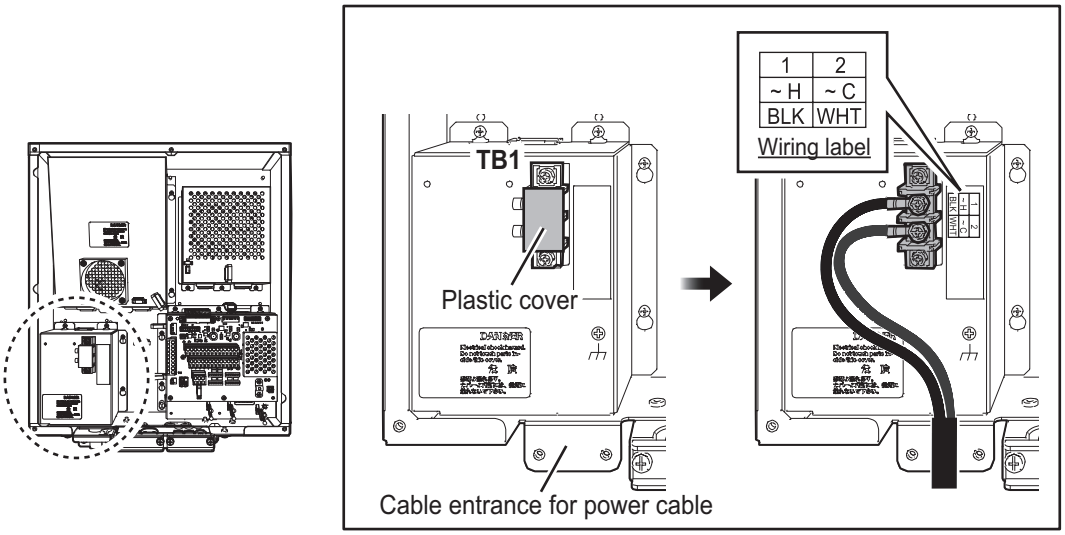

5. Remount the plastic cover and the front cover, then clamp the power cable on the sheath.

Connection of cable for Processor Unit

1. Connect the lines of the cable to the appropriate WAGO connectors (TB704), referring to the interconnection diagram at the back of this manual.
2. Set the cable for Processor Unit on the upper cable entrance as shown below, and fasten the armor part of the cable with the cable clamp.

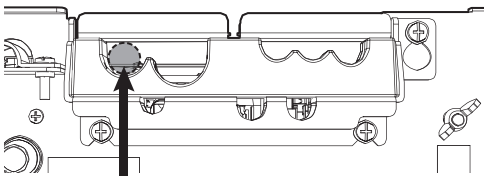

3. Connect the lines of the cable for Processor Unit as shown below through the wiring clamp (B).
   - Serial lines: TB704
   - Shield line: Screw (A)
   - LAN cable: J503

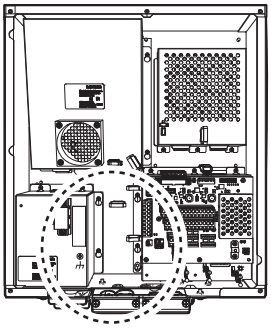

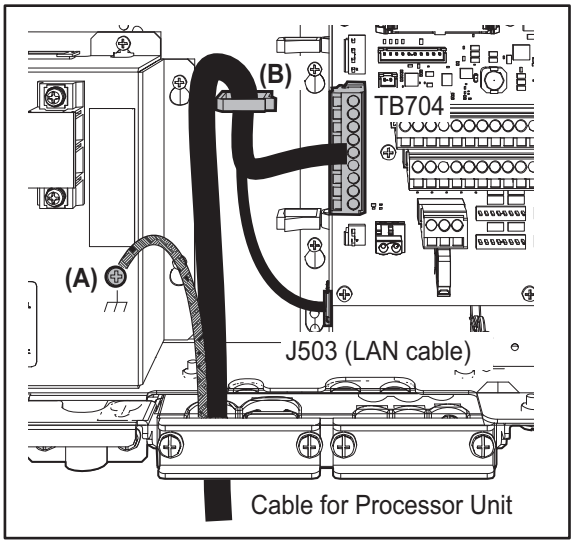

Connection of cable for Control Unit

1. Connect the lines of the cable to the appropriate WAGO connectors (TB711 and TB712), referring to the interconnection diagram at the back of this manual.
2. Set the heat shrinkable part of the cable for Control Unit on the appropriate lane on the lower cable entrance, as shown below. Fasten the copper part of the cable with the cable clamp.

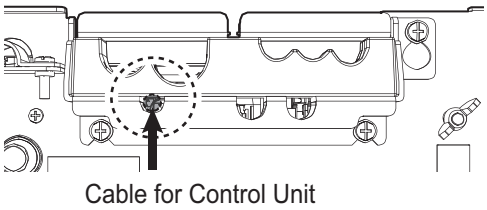

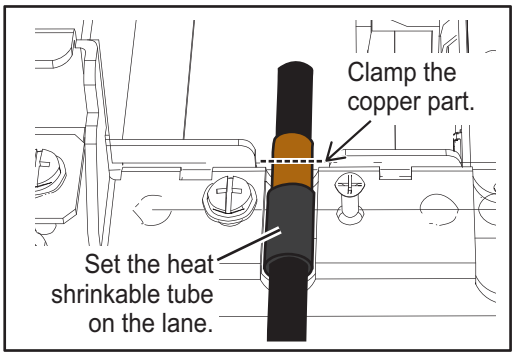

3. Connect the cable for Control Unit to the connectors (TB711 and TB712) through the appropriate wiring clamps (A) and (B).

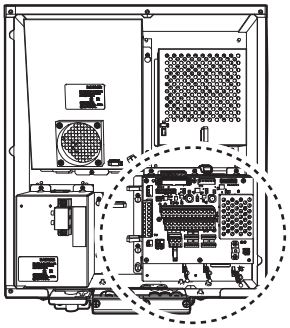

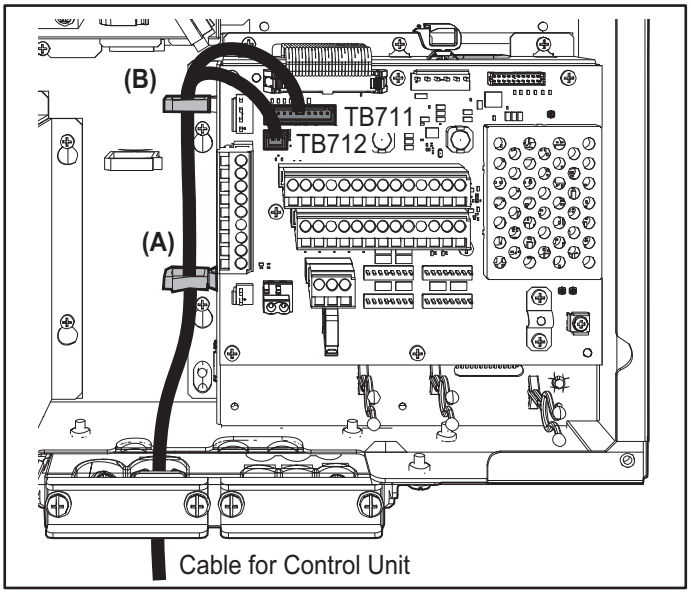

Connection of cable for sub monitor

Up to four cables (RW-00136, RW-4864) can be uses as sub monitor cables. Set their cables on the specified cable entrance as shown in the figure to the right.

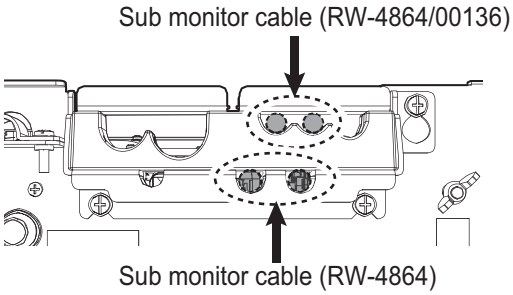

1. Set the shield part of the sub monitor cables on the appropriate lanes on the upper/lower cable entrances as shown below. Fasten the shield part of the cable with the cable clamp.
2. Connect the sub monitor cables to the connectors. The cable for input signal of an external radar should be connected to the connector J710.
   - RW-4864 on the **upper** entrances: max. two lines through the wiring clamps (A) and (B) to two of connectors J708, J709, J710 or J717. See the dashed lines in the figure below.
   - RW-4864 on the **lower** entrances: max. two lines through the wiring clamps (B) to (E) to two of connectors J708, J709, J710 or J717. See the solid lines in the figure below.
   - RW-00136 on the **upper** entrances: max. two lines through the wiring clamps (C) to (E) to two of connectors J708, or J710.

For **RW-4864** cable

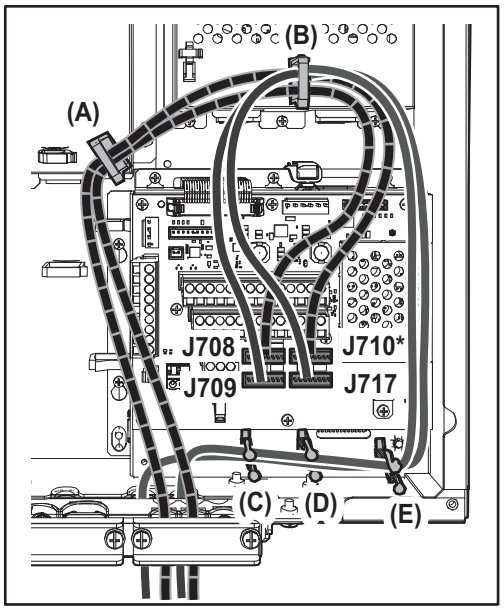

For **RW-00136** cable (from upper entrance)

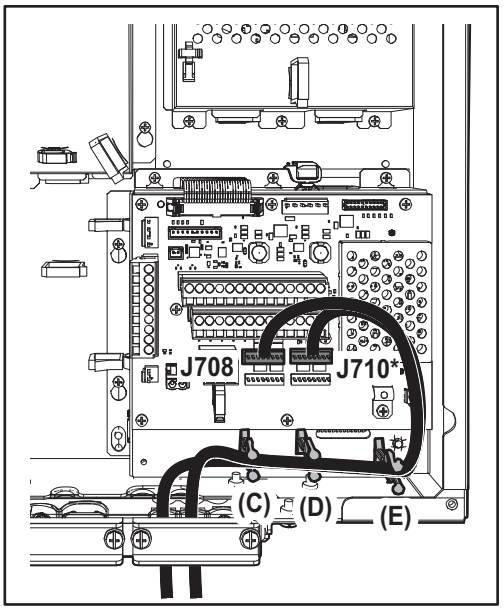

*: For cable for “input” signal of an external radar, connect to J710.

2.7 Transceiver Unit

The TR-DOWN radar requires the transceiver unit as follows:

- Transceiver Unit RTR-108 for X-band radar (FAR-2328W)
- Transceiver Unit RTR-109 for S-band radar (FAR-2338SW)

2.7.1 How to fabricate the cables

For how to connect the LAN modular plug, see "LAN cable" on page 2-5. For how to connect the WAGO connector, see "WAGO connector" on page 2-6.

TTYCYSLA-10 (for serial cable)

Clamp the armor with the cable clamp.

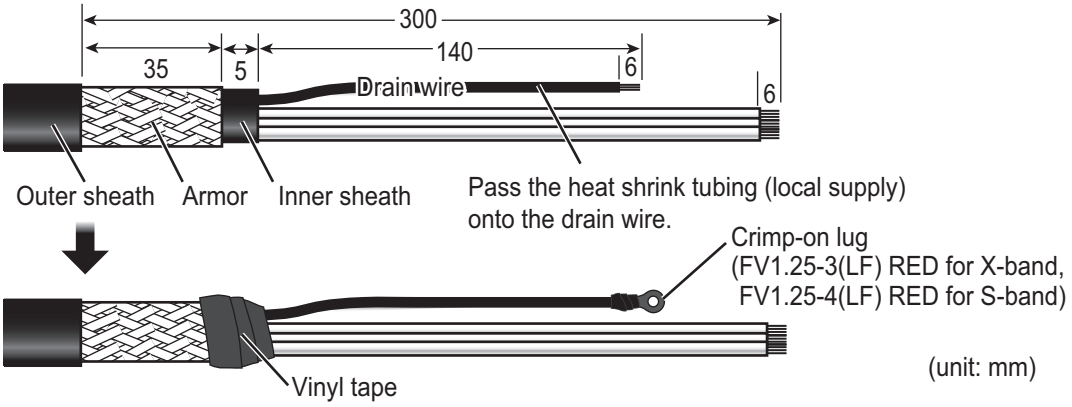

RW-00135

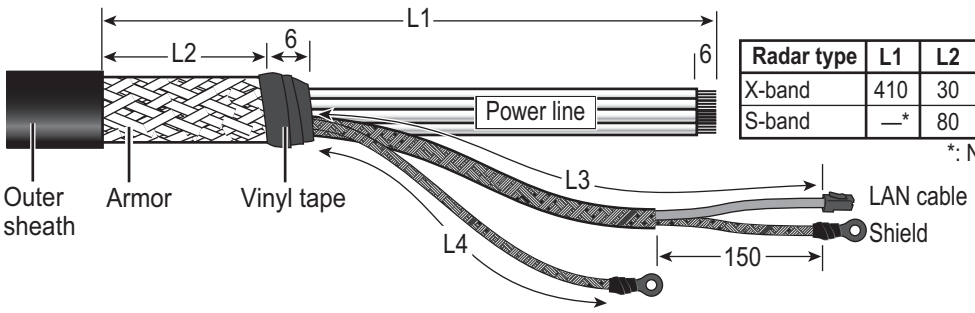

(unit: mm)

Radar type	L1	L2	L3	L4
X-band	410	30	470	200
S-band	—*	80	—*	—*

*: Not specified

S03-92-15/30/40/50 (RW-00136 + connector, for a sub monitor)

Note: The maximum cable length is 50 m.

Clamp the armor with the cable clamp.

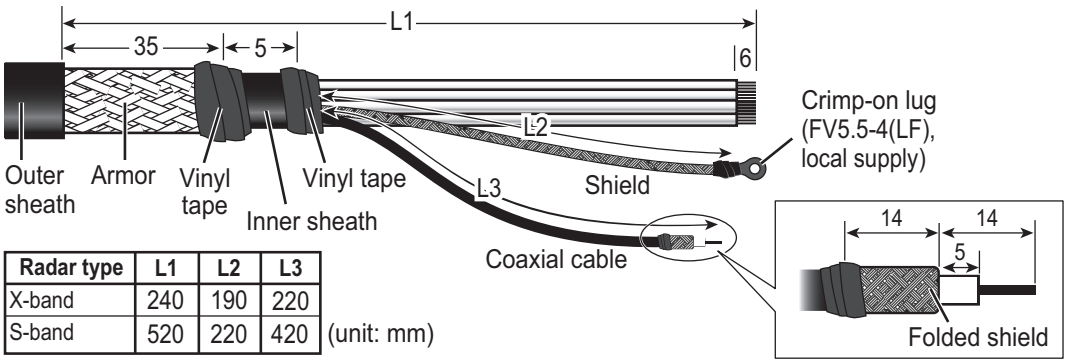

Radar type	L1	L2	L3
X-band	240	190	220
S-band	520	220	420

(unit: mm)

2.7.2 How to connect the cables from X-band radar antenna

Antenna cable, serial cable, sub monitor cable

1. Loosen eight bolts then remove the cover of the unit.
2. Unfasten three bolts from the cable clamp. Lay the cables in respective cable slots so their armors rest in the slots.

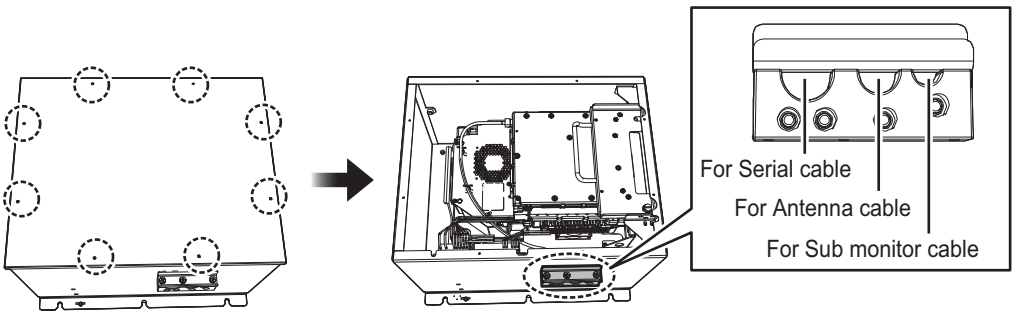

Loosen eight bolts. Remove three bolts.

3. Attach the appropriate WAGO connectors (pre-attached) to the appropriate cables, and then connect the antenna, sub monitor and serial cables to the RF-TB Board shown in the following figure. For how to connect the WAGO connector, see "WAGO connector" on page 2-6. For pin arrangement, see the interconnection diagram at the back of this manual.
   Note 1: Make sure to pass the cable through the specified locking wire saddle.
   Note 2: A terminal opener is provided on the RF-TB Board.

- Destination of Antenna cable
  Power line: TB801 through the locking wire saddle (A).
  LAN cable: J821 through the locking wire saddles (A and B, three places.)
  Shield of power line: Screw (C)
  Shield of LAN cable: Screw (D)

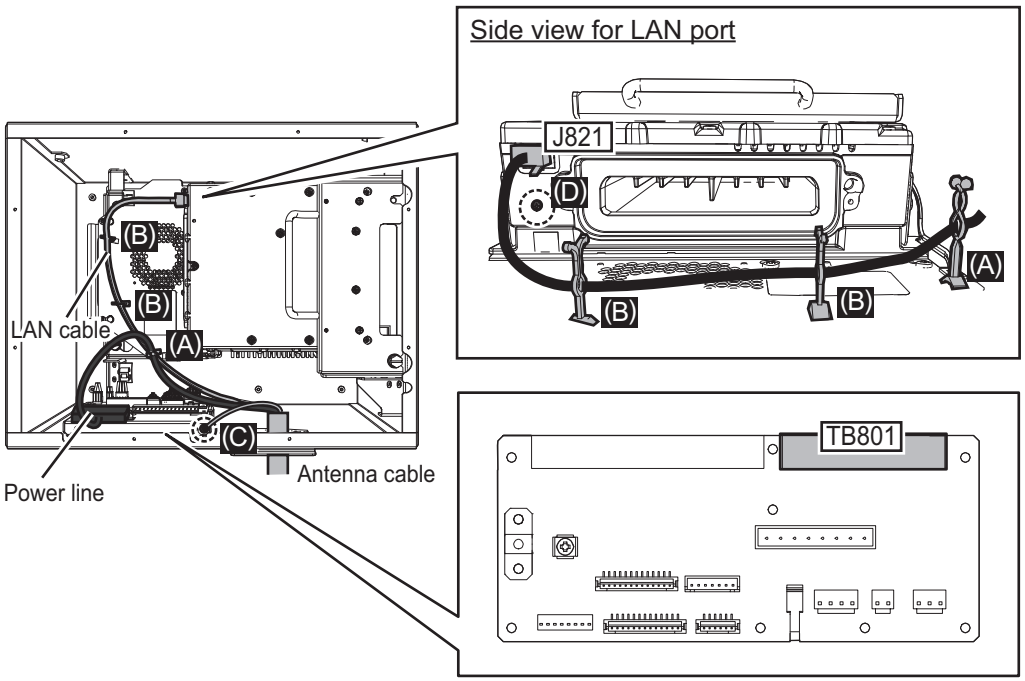

- Destination of cable for the sub monitor
  Signal line: TB803 through the locking wire saddle (A).
  Coaxial cable: TB804
  Shield of signal cable: Screw on fixing plate (C)

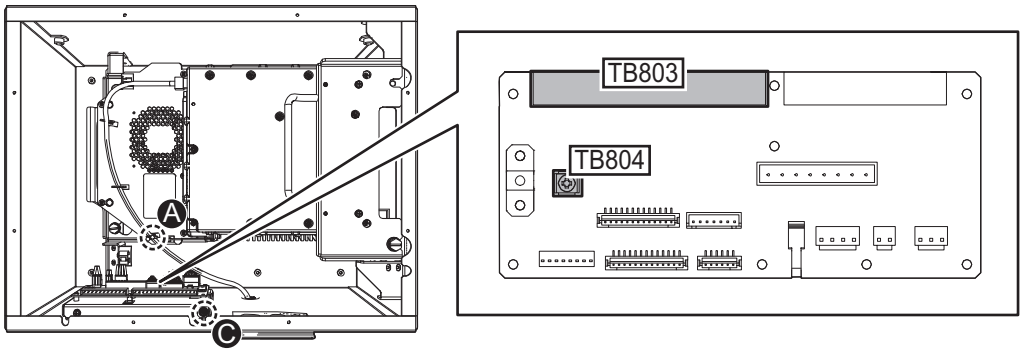

- Destination of Serial cable from the Antenna Unit
  Serial cable: TB802 and TB803 through the locking wire saddle (A).
  Shield of serial cable: Screw on fixing plate (C)

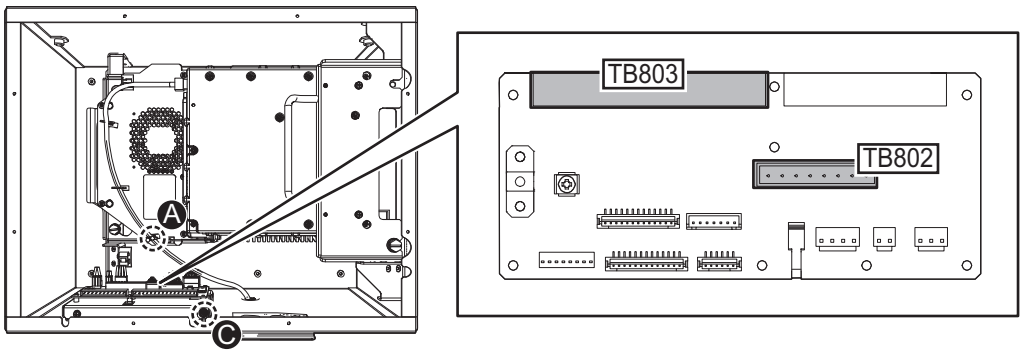

4. Bind all cables with cable ties supplied locally (two places).

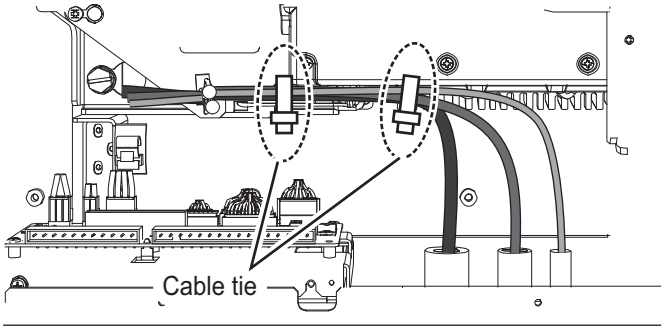

5. Check that armor of cables are lying in their respective cable slots then fasten the cable clamp.

Flexible waveguide (FR-9)

The RF interconnection between the Antenna Unit and the transceiver can be made with a flexible waveguide (FR-9). If the rectangular waveguide is used, observe the following installation guidelines.

- Correctly installed waveguide runs ensure the most efficient transmission of electrical energy at high frequencies. Electrical losses, however, occur in the waveguide runs. To minimize them the following factors are of great importance: minimum length, airtightness and electrical continuity.
- Another consideration required is that of frequency disturbance. The transmitting valve, a magnetron, is the primary oscillator in the radar. This is different from the oscillation system at lower frequencies in which conventional radio valves are used. In the latter case, the primary oscillator is always protected from the effects of load impedance by a buffer stage so that frequency and waveform are left unobstructed. With a waveguide and magnetron, however, mismatch of impedance causes “frequency pulling.” For this reason, the number of possible mismatches in a waveguide run, i.e., joins and bends, must be kept minimum.
- Each pair of flanges should be coupled with one O-ring, four bolts and spring washers and the choke flange must be in the upper position. The bolts and O-ring must be greased before insertion to facilitate removal if required at a later date.
- The transceiver unit output flange is a plain type and the Antenna Unit output flange is a choke type, and it is important to maintain this relationship throughout the waveguide run.

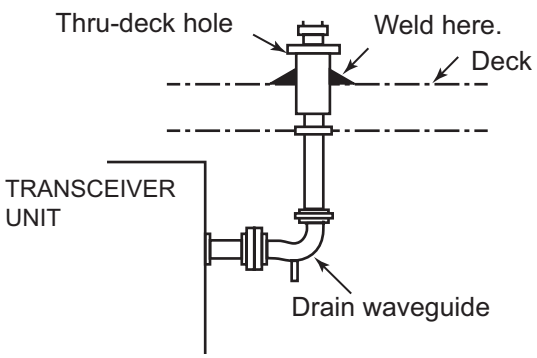

- After installation of the waveguide is completed, the coupling portions must be sealed by using the adhesive supplied.
- In a very short time the surface of the waveguide becomes green with verdigris. Therefore, paint both the surface of the waveguide and flanges to avoid corrosion and water penetration. Paint must not be allowed to reach the inner surface of the waveguide or the mating surface of any flange.

2.7.3 How to connect the cables from S-band radar antenna

Antenna cable, serial cable, sub monitor

1. Loosen eight bolts then remove the cover of the unit.
2. Unfasten three bolts from the cable clamp. Lay the cables in their cable slots so their armors rest in the slots.

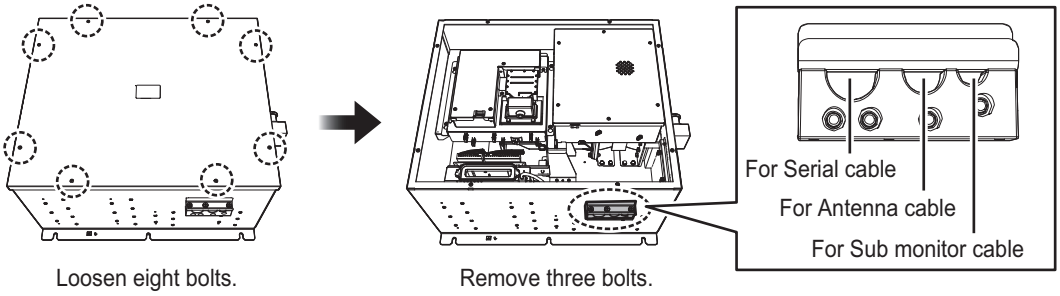

3. Attach the appropriate WAGO connectors (pre-attached) to the appropriate cables, and then connect the antenna, sub monitor and serial cables to the RF-TB Board shown in the following figure. For how to connect the WAGO connector, see "WAGO connector" on page 2-6. For pin arrangement, see the interconnection diagram at the back of this manual.

   Note 1: Make sure to pass the cable through the specified locking wire saddle.

   Note 2: A terminal opener is provided on the RF-TB Board.

   - Destination of Antenna cable
     Power line: TB801 through the locking wire saddle (A).
     LAN cable: J821 through the locking wire saddle (A)
     Shield of power line: Screw (C)
     Shield of LAN cable: Screw (D)

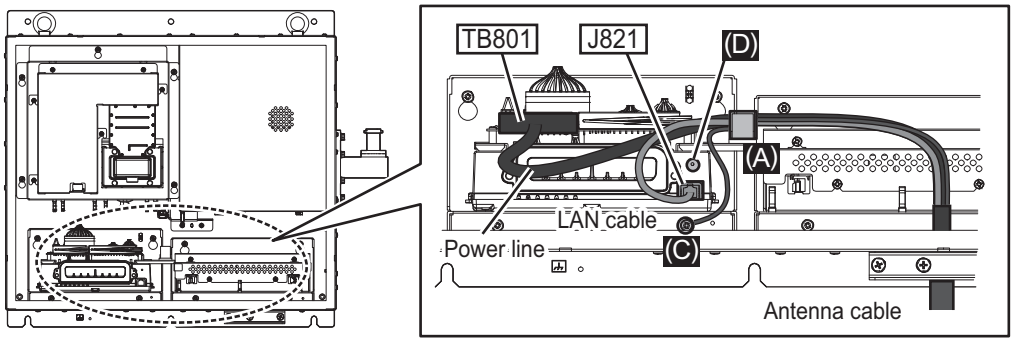

   - Destination of sub monitor cable
     Signal line: TB803 through the locking wire saddle (A), see the figure for the "Destination of Antenna cable:"
     Coaxial cable: TB804 (B)
     Shield of signal line: Screw (C)

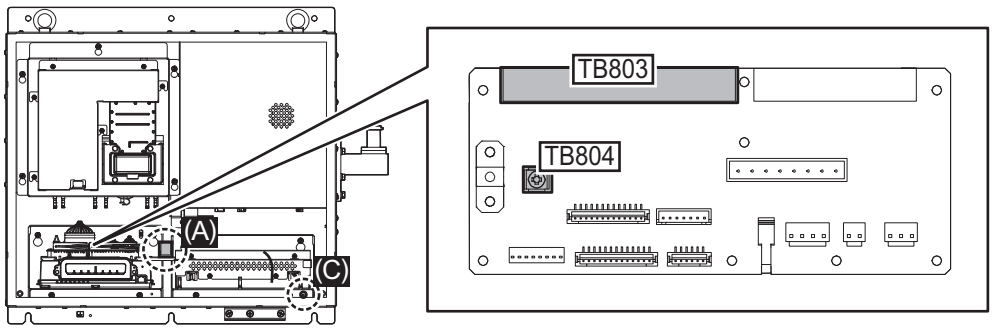

- Destination of Serial cable from the Antenna Unit
  Serial cable: TB802 and TB803 through the locking wire saddle (A).
  Shield of serial cable: Screw on fixing plate (D)

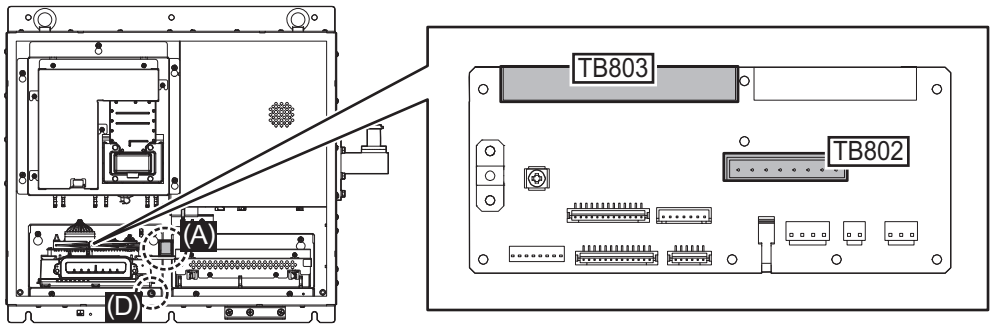

4. Bind all cables with cable ties supplied locally (two places).

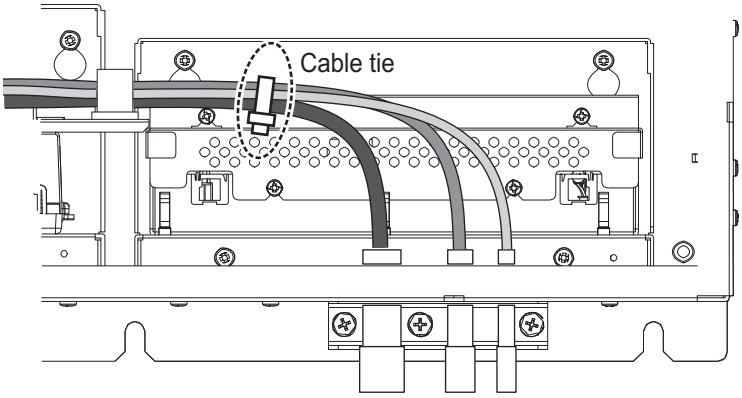

5. Check that armor of cables are lying in their respective cable slots then fasten the cable clamp.

Microwave coaxial plug

Attach the microwave coaxial plug to the coaxial cable. See the applicable FURUNO technical information for the procedure. Attach the coaxial cable assembly to the transceiver unit as follows:

1. Unfasten four bolts (M6×10) to remove the dust cover from the output WG adapter.
2. Fasten eight bolts (removed at step 1) to attach the flange to the transceiver unit.
3. Attach the coaxial cable to the converter of the flange.

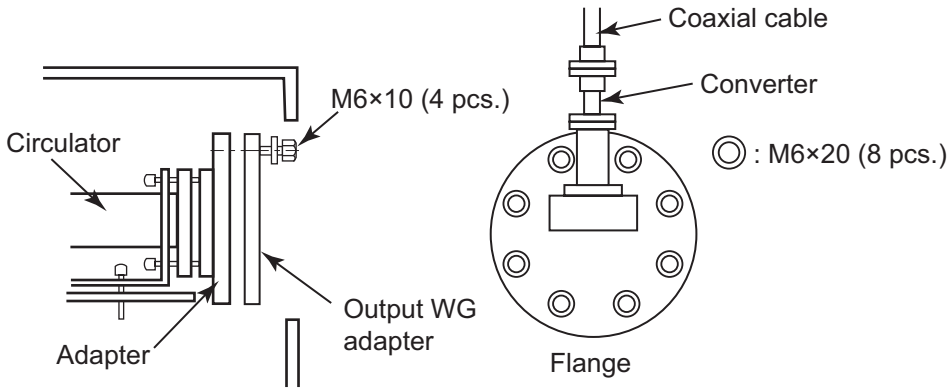

Transceiver unit, inside view

2.8 Processor Unit

2.8.1 How to fabricate cables

For locations of cables and cores, see the sticker on the reverse side of the top cover. (All dimensions in millimeters)

For how to connect the LAN modular plug, see "LAN cable" on page 2-5. For how to connect the WAGO connector, see "WAGO connector" on page 2-6.

RW-00135/RW-00339 (for Antenna cable)

Note: For the 1.5 m of RW-00339 cable (for FAR-2x58 radars), fabrication is not required.

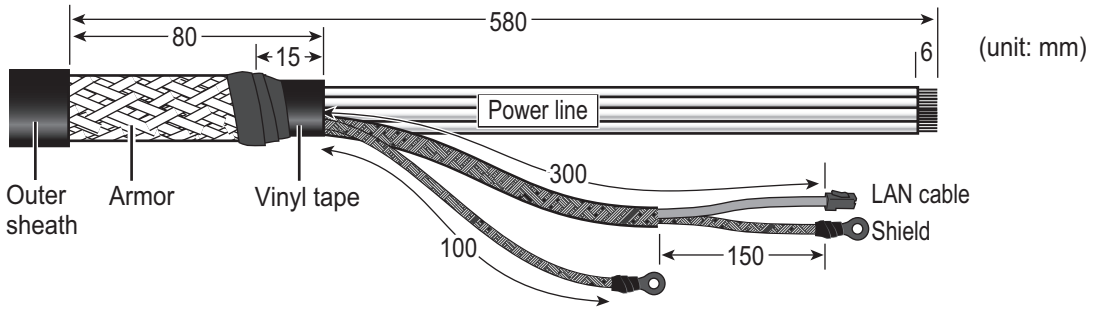

RW-9600/6895/4873 (for retrofit or foremast installation)

The existing cable can be used for the following cases. In these cases, the optional LAN Signal Converter is required. See section 2.10 "LAN Signal Converter" for details.

- Cable extension for foremast installation (For X-band of FAR-2x18/2x28/2x38 radars, TR-UP radar only)
- Retrofit (For X-band/S-band of FAR-2x18/2x28/2x38 radars, TR-UP radar only)

Note: The maximum antenna cable length is 100 m for RW-9600, 50 m for RW-6895/4873. If the existing antenna cable is longer than the above maximum length, replace the antenna cable with RW-00135.

The unused power lines are tied up and attached to the crimp-on lug FV5.5-S4 (LF), supplied locally. Connect these unused lines to the ground terminal with the shield line. See the interconnection diagram at the back of this manual for details.

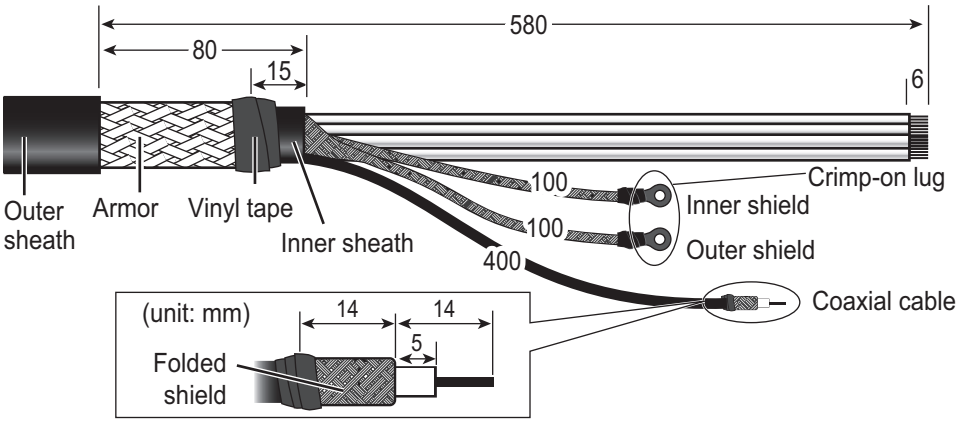

DPYC-2.5/6 cable (for Power)

Clamp the sheath with the cable clamp. For the supplied crimp-on lugs, use FV2-4 for AC power cable, FV5.5-4 for DC power cable.

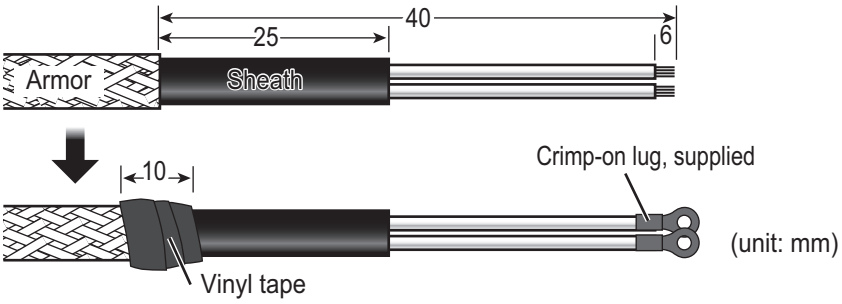

TTYCSLA series cable (for serial)

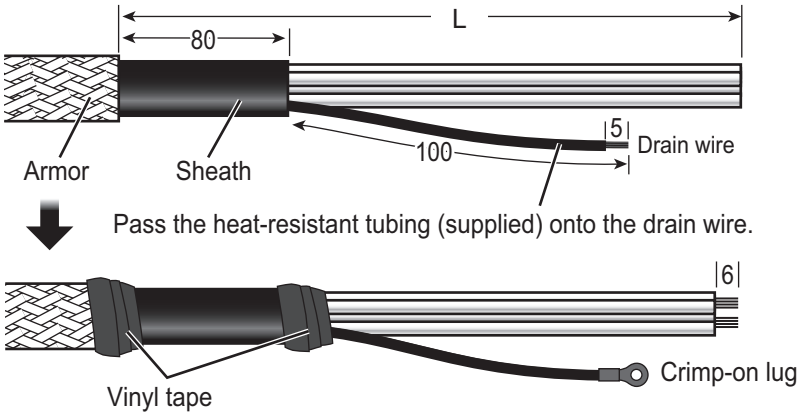

(unit: mm)

Cable type (JIS)	L
TTYCSLA-1Q	590
TTYCSLA-4	720
TTYCSLA-7	570

2.8.2 How to connect cables inside the Processor Unit

Connect the ground wire between the ground terminal on the chassis and the ship's earth.

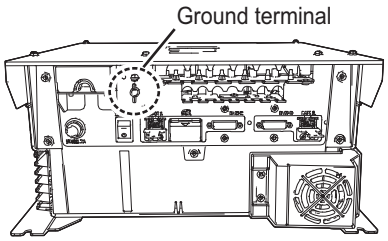

How to open/close the top cover

Unfasten six screws (M4×8) to open the top cover from the Processor Unit.

After the appropriate cable connections are completed, fasten six screws to close the top cover.

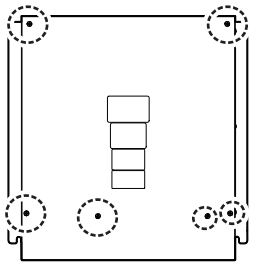

Connection of Antenna cable

For existing antenna cable, see section 2.10 "LAN Signal Converter".

1. Remove the spacers to pass the antenna cable on the upper plate.

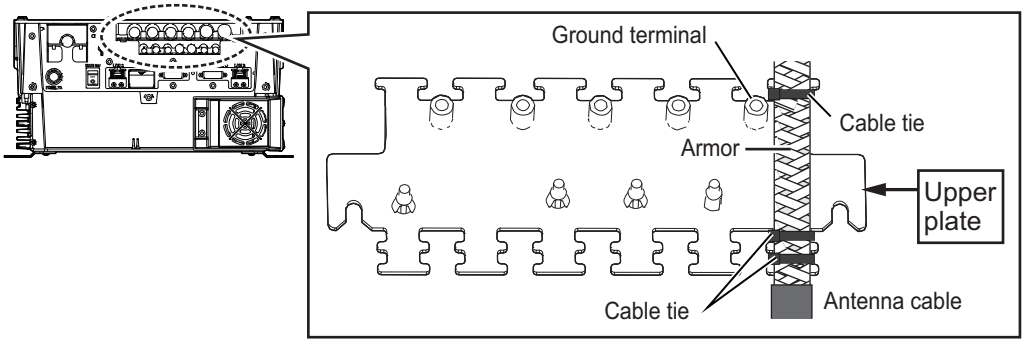

2. Fasten the cable to the post part of the plate with a cable tie (local supply). Connect the inner/outer shields and the extra wires of the existing cable to the ground terminal.
   Note: Be sure the vinyl sheath of the cables is on the post.
3. Pass the cable to connect the WAGO connector on the TB Board 03P9648 through the locking wire saddles as shown below. Connect the shield for LAN cable to the ground terminal near the LAN connector.

For RW-00135/00339 cable

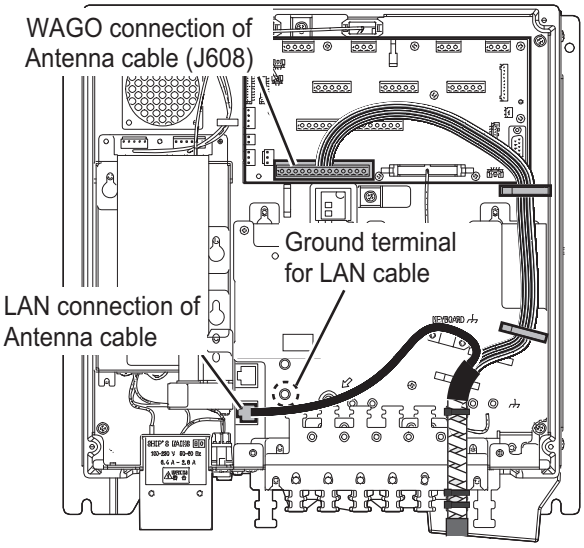

For retrofit cable

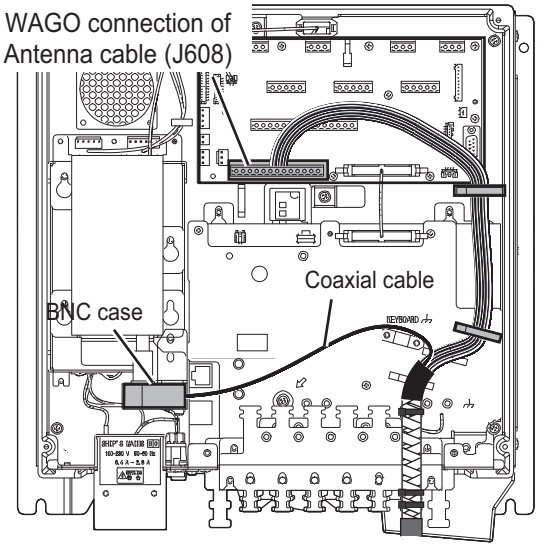

Connection of Power cable

1. Unfasten two screws to open the power cable cover.
2. Remove the plastic cover and cable clamp to pass the power cable.
3. Connect the cable to the terminal with the pre-attached crimp-on lugs. Clamp the power cable on the sheath.
   Note: For DC power specifications, the Processor Unit does not have the main switch. Connect each polarity (1: +, 2: –) of the cable correctly to the terminal board.

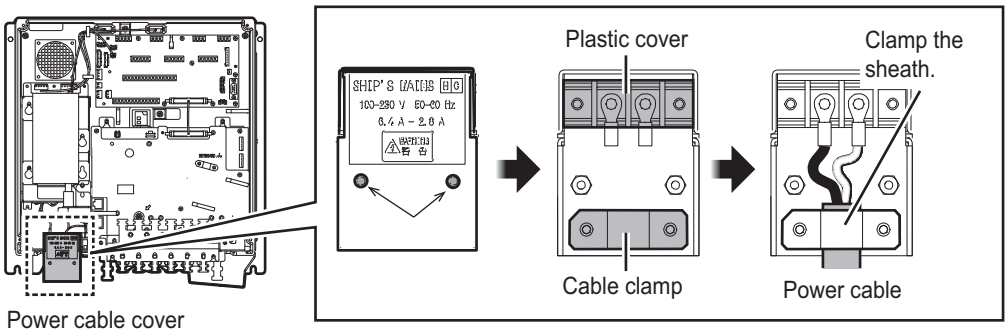

4. Remount the plastic cover and the power cable cover.

Connection of cables for serial, contact signal lines and sub monitors of ECDIS

1. Unfasten the four bolts dashed circled below to remove the upper plate of the cable clamp.

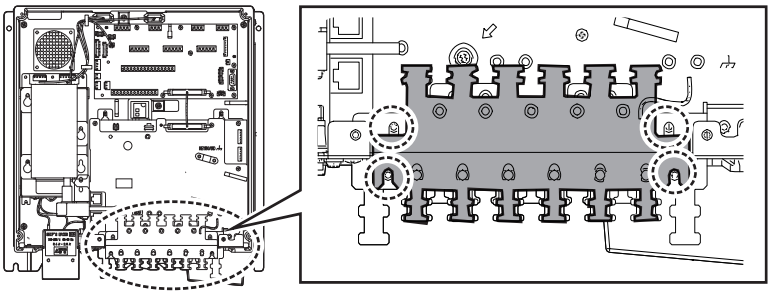

2. Remove the spacers to pass the appropriate cables on the upper and lower plates. The recommended cable entrances are shown as below.

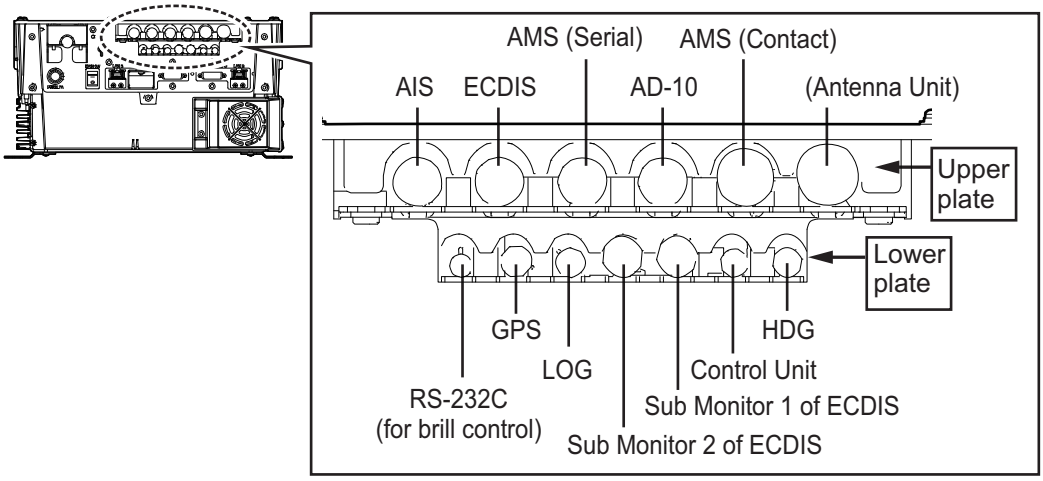

3. Fasten the cables to the post part of the plates with cable ties (local supply).
   Note: Be sure the vinyl sheath on the post.

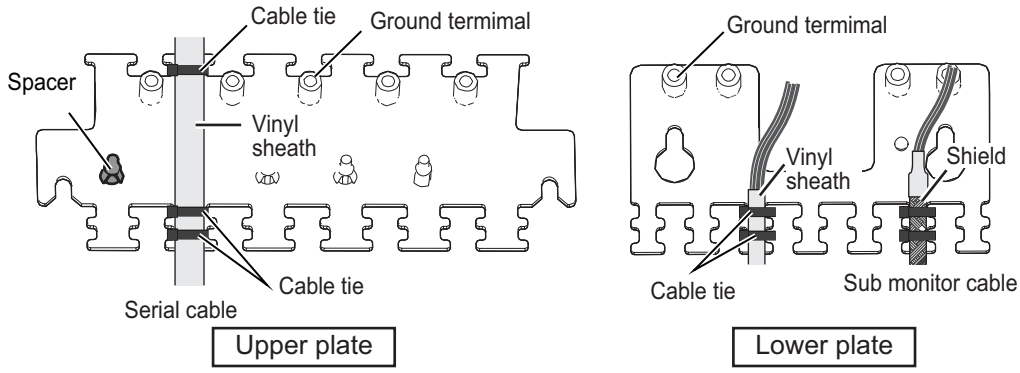

4. Pass the cables to the TB board 03P9648 and 03P9562 through the locking wire saddles (A, B and C) in the figure shown right.
   For the cables on the upper plate, use locking wire saddles (A and B).
   For the cables on the lower plate, use locking wire saddles (A, B and C).

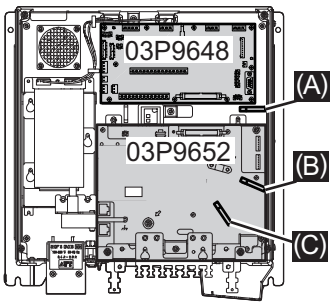

5. Connect the connectors to the TB Board. referring to the interconnection diagram.

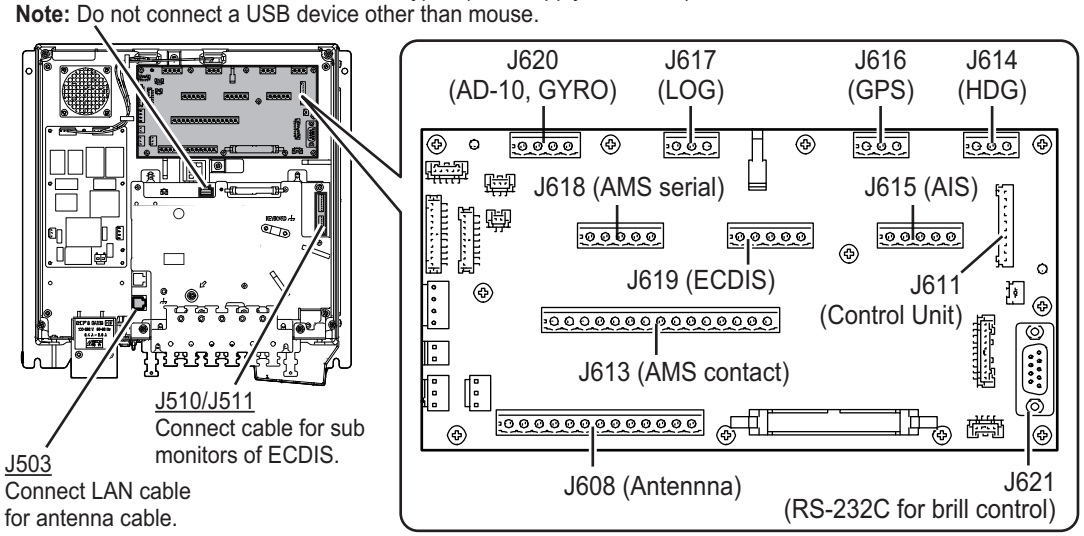

6. Connect the ground wires of cables to the near ground terminals on the plates.

Connection of cables for Control Unit

1. Unfasten the four bolts, indicated with dashed circles below, to remove the upper plate of the cable clamp.

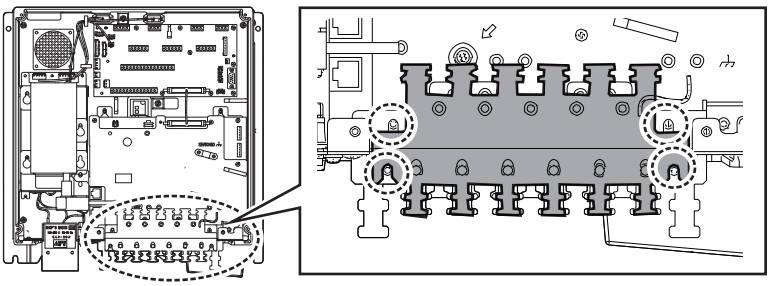

2. Remove the appropriate spacer to pass the cable for Control Unit on the lower plate. The recommended cable entrance is shown as below.

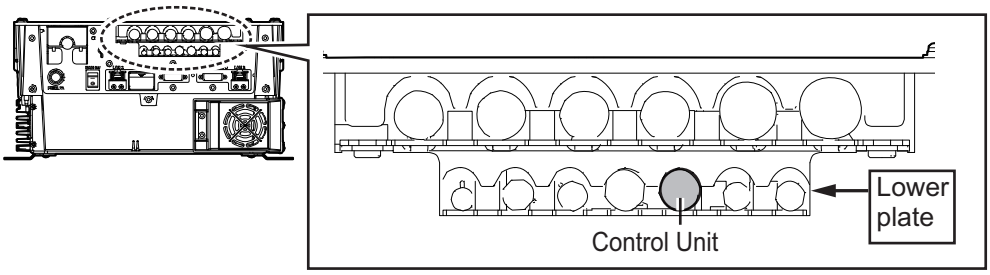

3. Fasten the cable to the post part of the plate with a cable tie (local supply).
Note: Be sure the vinyl sheath on the post.

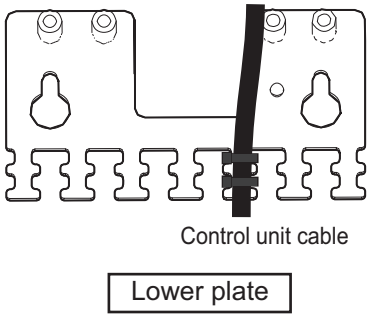

4. Pass the cables to the TB board 03P9648 and clamp the shield of the cable with the cable clamp (A) shown in the following figure. Then, connect to J611 and J612.

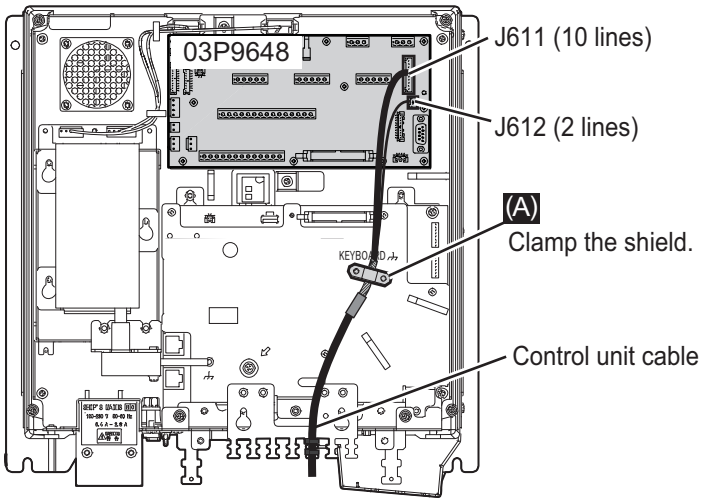

Connection of cable of LAN, Monitor Unit, VDR

Connect the cables of Intelligent HUB (HUB-3000) and Switching HUB (HUB-100) to the LAN ports in front of the Processor Unit.

Connect the cables of Monitor unit or VDR to the DVI ports at the front of the Processor Unit.

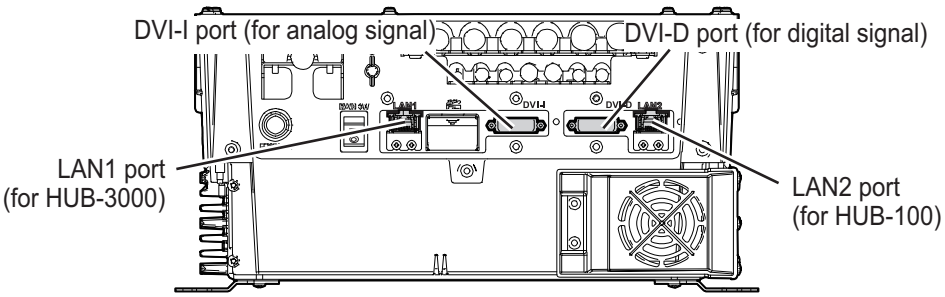

For VDR connection, the RGB signal can be output with using the optional DVI-BNC cable kit OP03-252 (Code No.: 001-496-900).

1. Attach the five connectors of the Cable Assembly (supplied) to the fixing plate (supplied) with cable ties as below.
2. Establish the ground system on the fixing plate.
3. Fix the cable assembly to the appropriate location with two screw (M5). The location must be within 200 cm of the Processor Unit.
4. Connect the VDR cables to the connectors of the cable assembly.

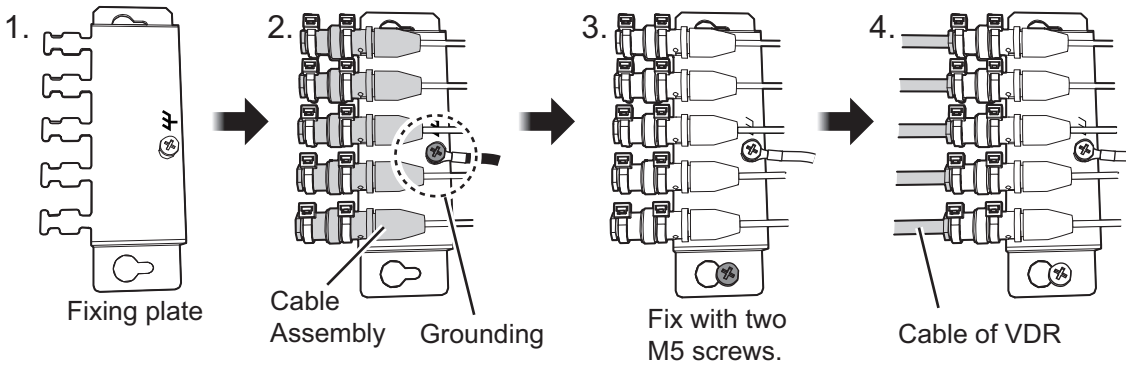

Fastening of USB connector (for C-type radars)

The USB connector of the RP board should be fastened as shown in the figure to the right. Use three cable ties (local supply) to secure the connector of the USB cable to the upper cable entrance of the Processor Unit.

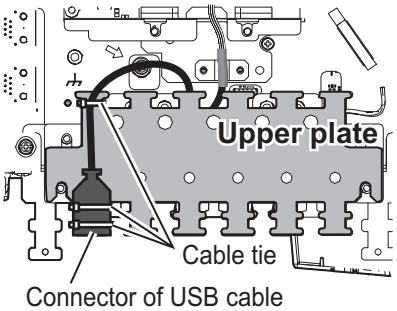

If there is no extra space on the cable entrance of the Processor Unit and you can not secure the cable connector, pass the USB cable next to the thinnest cable (cable entrance with the most room to spare), then pull the USB connector towards the front of the Processor Unit. Place the USB cable beneath the other cables to prevent water intrusion into the USB cable. Secure the USB cable to the neighboring cable with the supplied cable ties.

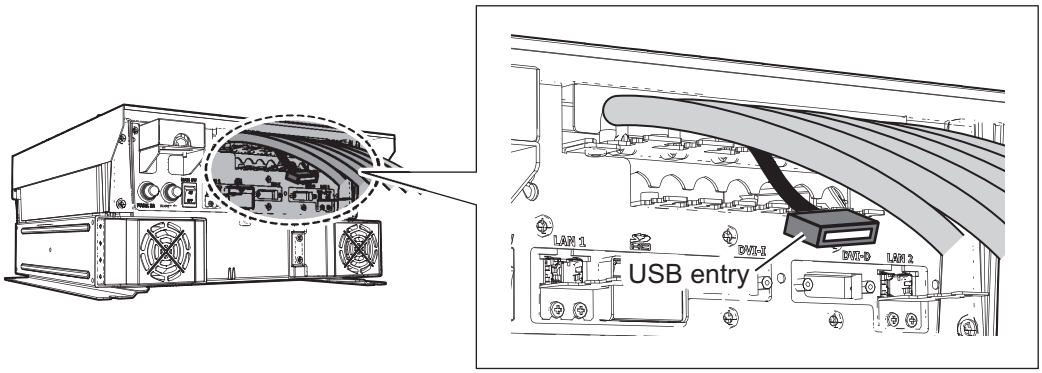

2.9 Monitor Unit

For the wiring of the monitor unit, see the operator's manual supplied with the monitor unit.

Mounting considerations

- Standard type
  - Connect the radar main monitor to the DVI1.
  - Connect the sub radar monitor to the DVI2.
- VDR connection
  To connect a VDR, it is necessary to output data in analog format. To connect a VDR to the DVI-I port, use the optional DVI-BNCX5+GND-L2.0 cable to output the RGB signal from the DVI-I. See the operator's manual supplied with the VDR. Adjustment of the output is necessary.

Menu Setting

The [INSTALLATION SETTING] menu appears only when the power is turned on for the first time after installation of the monitor unit.

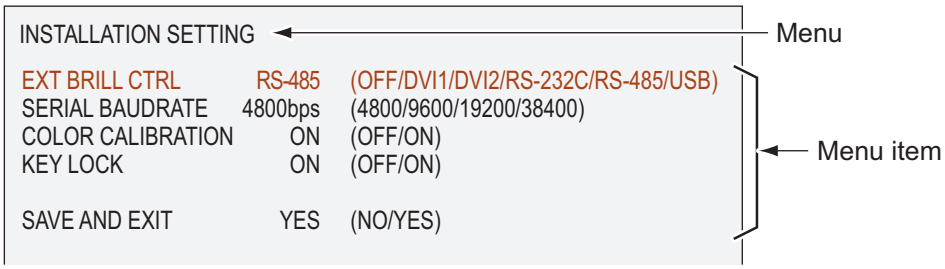

Adjust the settings referring to the following table.

EXT BRILL CTRL	COLOR CALIBRATION	KEY LOCK	DVI PWR SYNC*
DVI	OFF	ON	ON

*: [DVI PWR SYNC] is the slide switch at the bottom rear of the monitor unit. Confirm that this switch is set to [ON] (default setting). See Slide switch below for details.

Slide switch

Set the slide switch to "ON" (default setting). This setting automatically powers the monitor unit on or off according to the DVI signal input. The power switch of the monitor unit is inoperative.

Note: The OFF position provides control of the monitor unit power with the power switch of the monitor unit.

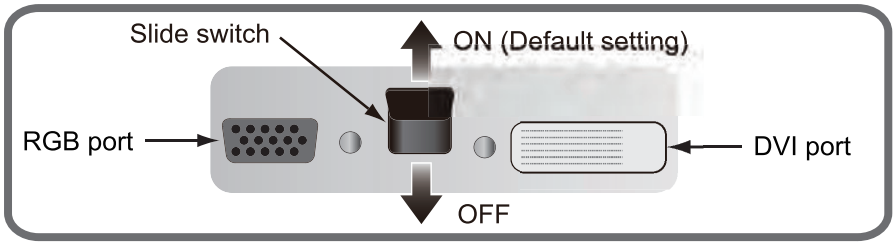

How to open the [INSTALLATION SETTING] menu

Turn off the monitor unit. While you hold the **DISP** key, press the **BRILL** key to turn on the monitor unit. Keep the **DISP** key pressed until the [INSTALLATION SETTING] menu appears.

Note: When the [DVI PWR SYNC] slide switch is ON, turn on the connected external equipment while you press the **DISP** key to turn on the monitor unit.

2.10 LAN Signal Converter

The LAN Signal Converter allows the use of existing antenna cable RW-9600/6895/4873 for TR-UP radar.

If the LAN Signal Converter is not attached in the antenna and Processor Units, the required LAN Signal Converter Kit (available as an optional extra) is listed below.

For X-band radar only, you can select a specification with the LAN Signal Converter pre-installed at the factory.

LAN Signal Converter Kit (option)

Radar	Type	Code No.
X-band magnetron radar	OP03-247-3	001-496-580
X-band solid state radar	OP03-247-4	001-568-890
S-band magnetron radar	OP03-247-2	001-496-570
S-band solid state radar	OP03-247-1	001-496-560

2.10.1 Application overview

The LAN Signal Converter has two applications.

Application 1: Use with existing antenna cable (retrofit)

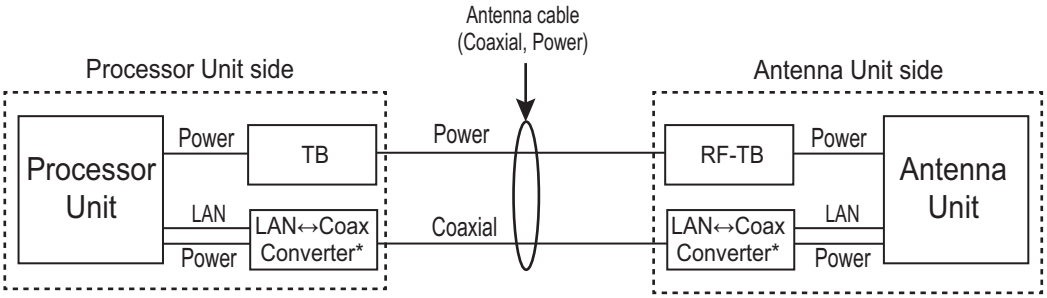

** Installed inside respective unit.*

Method 1: Using existing antenna cable (RW-9600/6895/4873)

Note: Use with existing antenna cable (RW-9600/6895/4873) in case of retrofit. The maximum length of the antenna cable is 100 m for RW-9600, 50 m For RW-6895/4873.

Application 2: Foremast installation (for X-band radar only)

Foremast installation, where the distance between the Antenna Unit and the Processor Unit is more than 100 m (max. 460 m). In this case, two Junction Boxes RJB-001 are required (for antenna and Processor Units). See section 2.11 and the interconnection diagram for connections in the junction box.

The Cable Extension Kit (Type: OP03-224-3, Code No.: 001-254-410), comprised of two junctions boxes, one LAN Signal Converters and necessary hardware, is available as an optional extra.

Note: Only the RW-9600 cable can be used for foremast installation. The RW-6895/4873 cables are not available.

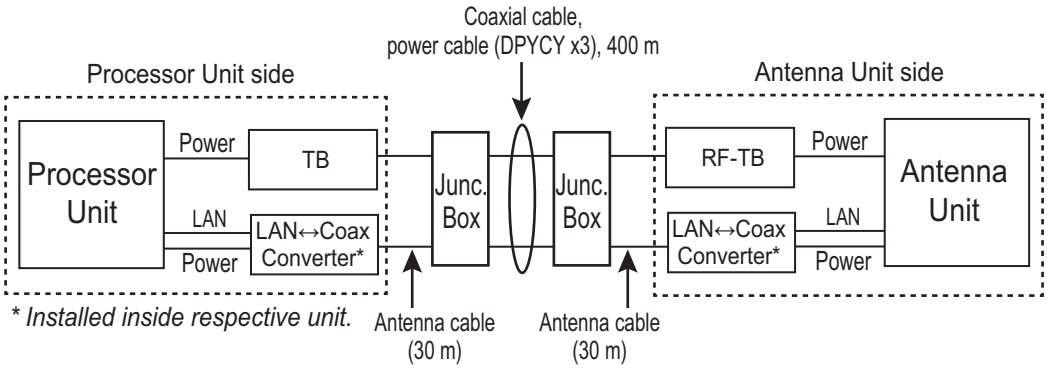

Method 2: Using antenna cable RW-9600

2.10.2 Wiring in the Antenna Unit with LAN Signal Converter pre-installed (X-band radar only)

Note: If the Antenna Unit does not included the LAN Signal Converter, the converter kit (available as an optional extra) is required. See "LAN Signal Converter Kit (option)" on page 2-68.

Dismount the transceiver unit in the Antenna Unit. See section 2.2.2, for details. Also, in the procedure, mainly figures of magnetron radar are shown.

1. Unfasten the coaxial cable from the converter in the Antenna Unit.

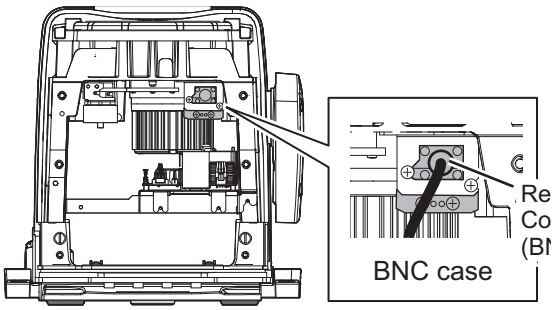

Rear view

2. Unfasten two screws to detach the BNC case from the Antenna Unit.

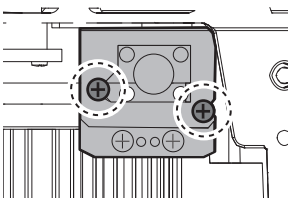

3. Loosen two screws on the BNC case. Attach the coaxial cable from the Antenna Unit then close the case.

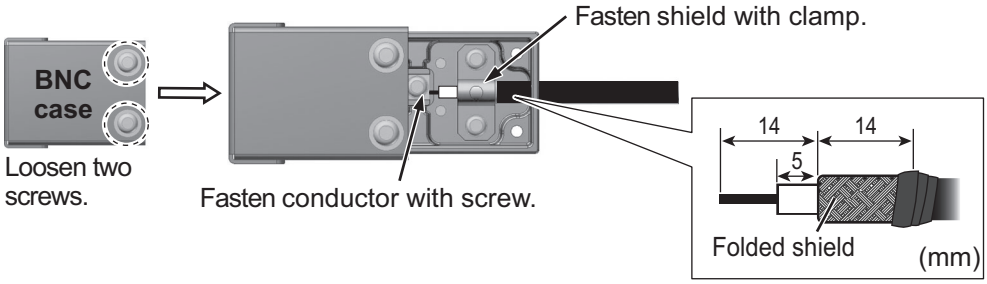

4. Fasten the BNC case to the original position in the Antenna Unit with original two screws, referring to step 2.
5. Mount the transceiver unit to the Antenna Unit.
6. Re-connect the coaxial cable (disconnected at step 1).

2.10.3 Wiring in the Processor Unit installed the LAN Signal Converter already (X-band radar only)

Some parts or wiring may have been omitted from the illustrations of the Processor Unit for clarity.

1. Disconnect the connection (A) between the converter and BNC case. Unfasten two screws (B) on the BNC case assembly to remove the BNC case assembly from the Processor Unit.

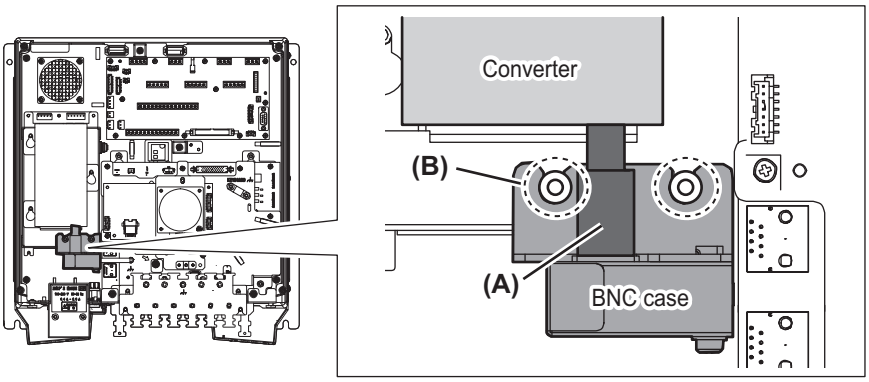

2. Loosen two screws on the BNC case. Attach the coaxial cable from the Antenna Unit.

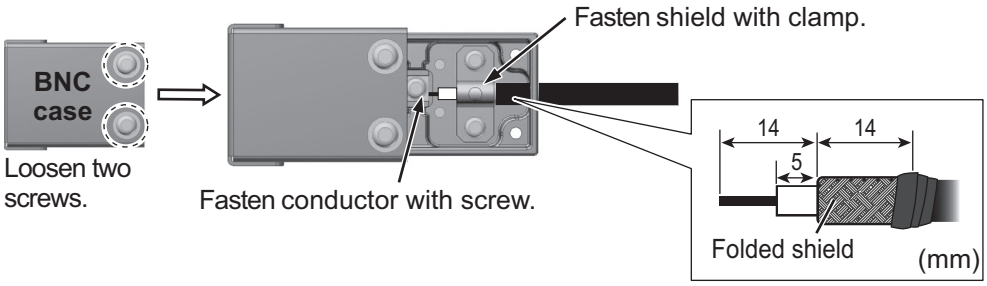

3. Loosen the screws (C) on the BNC case assembly, then attach the BNC case assembly to the original position in the Processor Unit.

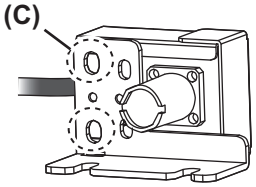

BNC case assembly

4. After attaching, adjust the position of the BNC case, then fasten the two loose screws (C) tightly.

2.10.4 How to check the installation

Observe the LEDs on the converter to check for proper operation and troubleshooting.

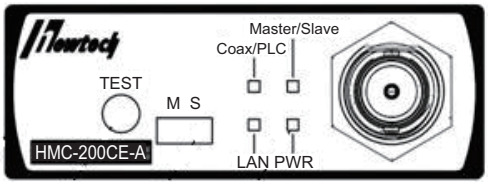

LED	State	Meaning
PWR	OFF	Power OFF
	Lighting green	Power ON
	Flashing orange	Test mode
LAN	OFF	Link down
	Lighting green	100 M link up
	Flashing green	100 M active
	Lighting orange	10 M link up
	Flashing orange	10 M active
Coax/PLC	OFF	Link down
	Lighting green	Link up
Master/Slave	Lighting green	Master mode
	Lighting orange	Slave mode

Note: The **TEST** button is for factory use. Do not operate the button.

2.11 Junction Box (option)

For FAR-2x18/2x28/2x38 X-band radars, the Junction boxes are required when the distance between the Antenna Unit and Processor Unit is greater than 100 meters (max. 460 meters); for example, the Antenna Unit is installed on the foremast. Use signal cable RW-9600 (×2), power cable DPYCY-6 (×3), and coaxial cable RG-12/UY(×3).

Pass each cable through its cable gland as shown to the right.

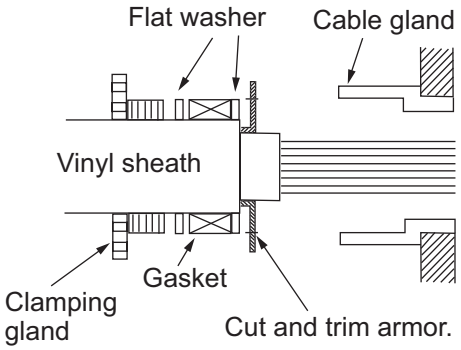

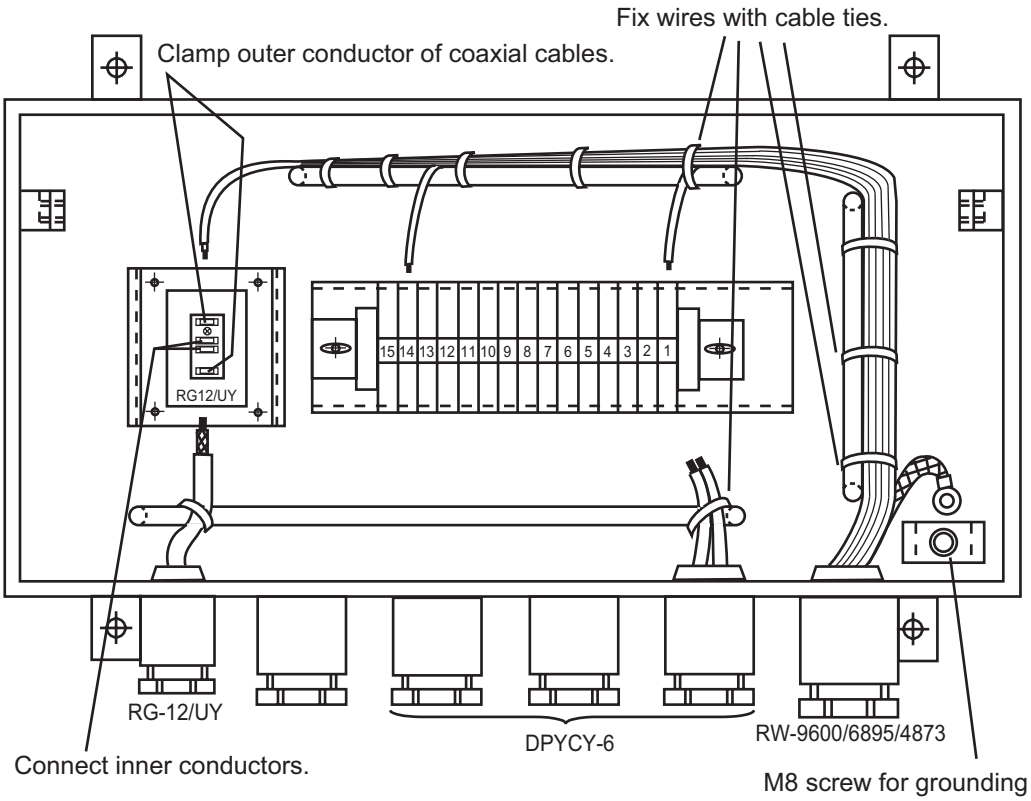

2.12 Intelligent HUB (option)

Secure the LAN cables to the cable clamps on the HUB-3000 with cable ties (supplied).

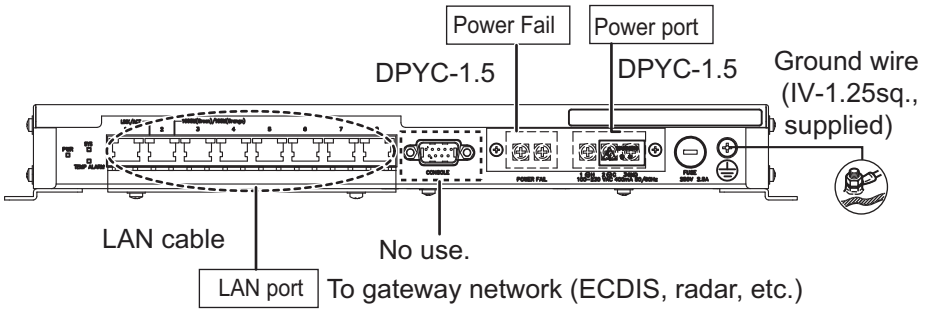

Attach the supplied LAN caps to unused connector holes to comply with waterproofing standard IPX2.

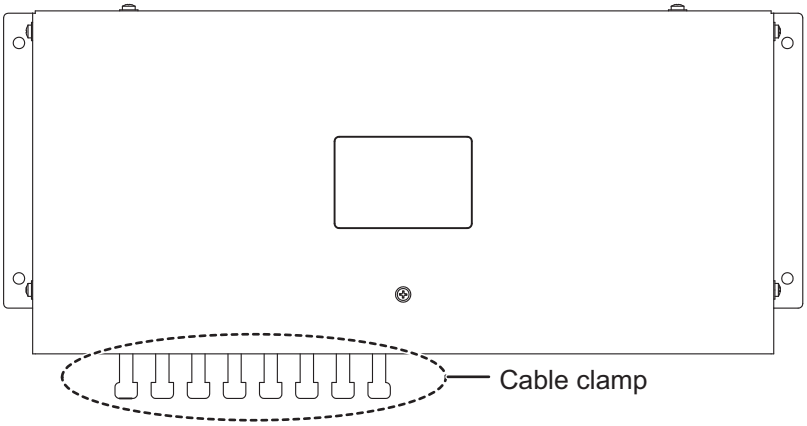

2.13 VDR Connection

The Processor Unit has the DVI-I port or the LAN port for connection of a VDR.

2.13.1 DVI-I (Analog RGB) port connection

- Use the optional RGB cable (DVI-BNCX5+GND-L2.0) to connect the VDR.
- The DVI-D port and DVI-I port have their own circuits. This prevents interruption of the radar picture shown on the main monitor connected to the DVI-D port, if a fault condition occurs at the DVI-I port.
- The Processor Unit continuously outputs video signals from its DVI-D and DVI-I ports. The operator cannot stop the output.

2.13.2 LAN2 port connection

- Connect a VDR complied to IEC-61162-450 standards to the LAN2 port.
- If the [VDR LAN OUTPUT] setting is set to [ON], the screenshot (JPEG-format) is output every 15 seconds through LAN2 port. See “[VDR LAN OUTPUT]”on page 3-23.
- The output image at the same resolution as the DVI-D port.
- The LAN2 port and DVI-D port have their own circuits. This prevents interruption of DVI-D port, if a fault condition occurs at the LAN2 port.

This page is intentionally left blank.

3. ADJUSTMENTS

Note: After completing the settings and adjustments, copy the setting data to a SD-card* (USB flash memory* for C-type radars), referring to the Operator's Manual. This will allow easy restoration of setting data after the MAIN Board is replaced, etc.

*: The SD card slot is in front of the Processor Unit, and the USB flash memory slot is connected to the RP board 03P9657.

At the first start-up after installation, turn on the Processor Unit with the main switch. Open the protected menus to adjust the radar. Follow the procedures in this chapter to complete the adjustment.

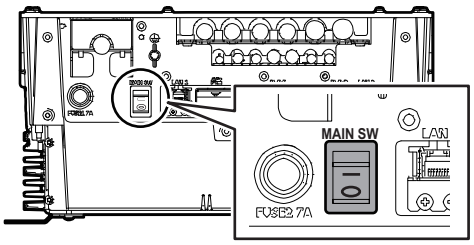

Main switch**

**: For DC power specifications, the Processor Unit does not have the main switch. To power on the Processor Unit for DC power specifications, turn on the ship's Mains.

For FAR-2x58 radars, turn on the Power Supply Unit also with the main switch.

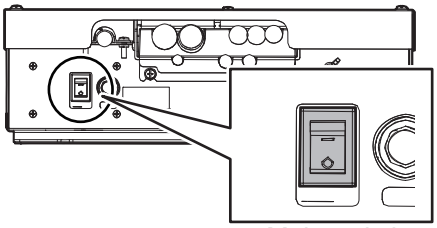
Main switch

Note: Turn the main switch of the Processor Unit off before turning the Power Supply Unit off. Further, both units should also be turned off at the ship's main switchboard.

Below are the controls on the Control Unit RCU-014/015(or optional RCU-016) that are used to make the adjustments.

RCU-014

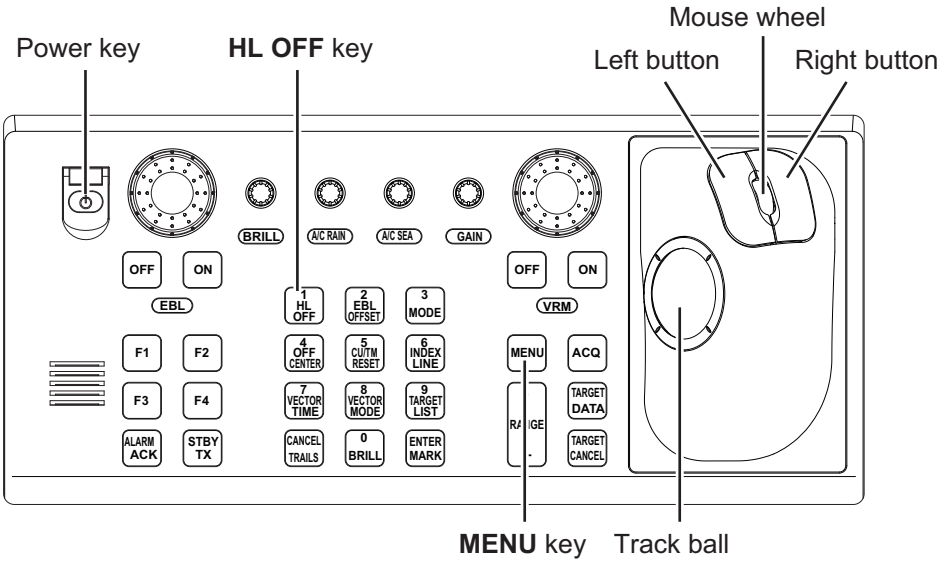

RCU-015/016

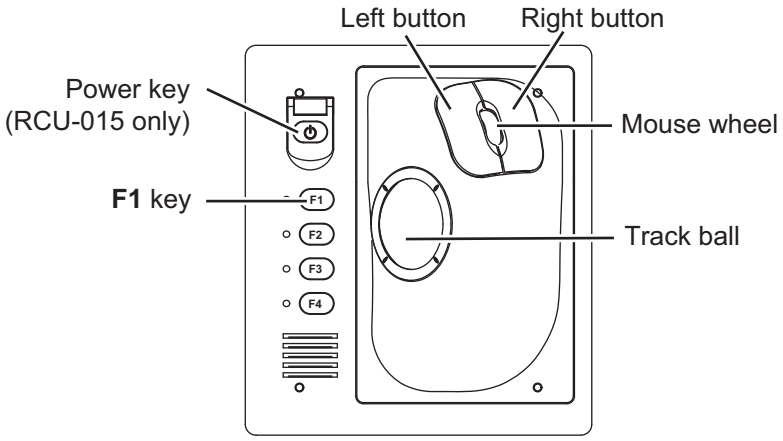

RCU-031

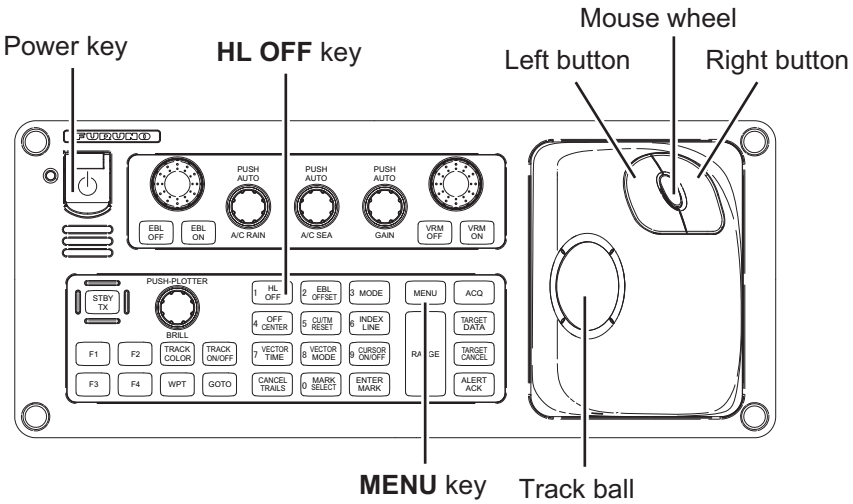

How to Use the Menu

1. Press the Power key to turn on the unit.
2. Press the **MENU** key or click the [MENU] box to open the main menu.
   The [RADAR INSTALLATION] menu does not appear when the unit is first turned on. It appears on the main menu after displaying it by following the procedures on the section 3.1 and is displayed until the unit is turned off.

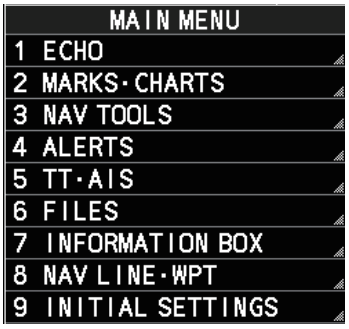

3. Operate the track ball or the mouse wheel to select a menu item then click the left button.
4. Operate the track ball or the mouse wheel to select a menu option then click the left button. To return to above layer, select [BACK] then click the left button or right button.
5. If the menu option requires entry of numeric data, rotate the mouse wheel to set the value, then click the left button.
6. Close the menu by pressing the **MENU** key once or click the right button few times.

3.1 How to Open the Radar Installation Menu

The [RADAR INSTALLATION] menu has various items through two pages for adjustment of the radar. To show this menu;

For RCU-014: Press and hold the **HL OFF** key, then press the **MENU** key five times.

For RCU-015/016: Put the cursor on the [MENU] box. Press and hold the **F1** key, then right-click five times.

Page 1

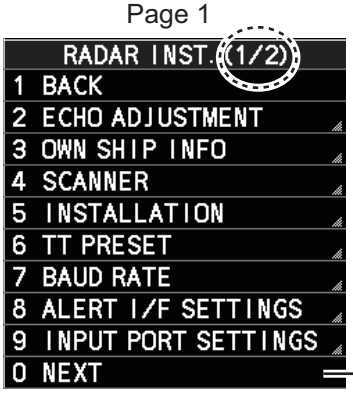

Go to page 2.

Page 2

Go back to page 1.

Tuning initialization

Tuning initialization is required before setting up the radar.

Open the main menu then select [ECHO]→ [TUNING INITIALIZE] to start initialization. "TUNE INIT" appears on the top of the display during the initialization.

After tuning is completed, right-click twice to close the menu.

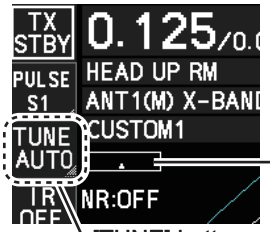

Tuning bar

[TUNE] button
[TUNE MAN]: Manual tuning
[TUNE AUTO]: Auto tuning

Note 1: In STBY, this menu is not available.

Note 2: For solid-state device radar, this menu is invalid.

3.2 How to Align the Heading

You have mounted the Antenna Unit facing straight ahead in the direction of the bow. Therefore, a small but conspicuous target dead ahead visually must appear on the heading line (zero degrees).

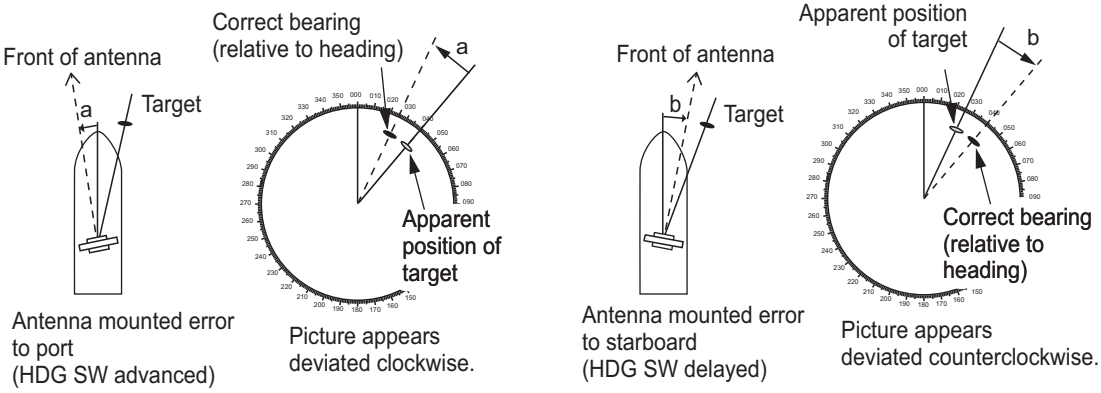

In practice, you will probably observe some small bearing error on the display because of the difficulty in achieving accurate initial positioning of the Antenna Unit. The following adjustment will compensate for this error.

1. Select a stationary target echo at a range between 0.125 and 0.25 NM, preferably near the heading line.
2. Operate the EBL control to bisect the target echo.
3. Read the target bearing.
4. Measure the bearing of the stationary target on a navigation chart and calculate the difference between the actual bearing and apparent bearing on the radar screen.
5. Show the [RADAR INSTALLATION] menu.
6. Select [ECHO ADJUSTMENT] followed by [HD ALIGN].
7. Key in the bearing difference. The setting range is 0° to 359.9° (default: 000.0°).
8. Confirm that the target echo is displayed at the correct bearing on the screen.

3.3 How to Adjust the Sweep Timing

Sweep timing differs with respect to the length of the signal cable between the Antenna Unit and the Processor Unit. Adjust sweep timing at installation to prevent the following symptoms:

- The echo of a "straight" target (for example, pier), on the 0.25 NM range, appears on the display as being pulled inward or pushed outward. See the figure below.

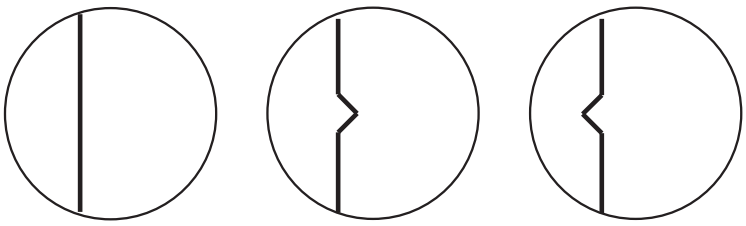

(1) Correct (2) Target pushed inward (3) Target pushed outward

- The range of target echoes is incorrect.

1. Set the GAIN, A/C SEA and A/C RAIN controls shown below.
   GAIN: 80
   A/C SEA: Fully counterclockwise (OFF)
   A/C RAIN: Fully counterclockwise (OFF)
2. Open the [RADAR INSTALLATION] menu, then select [ECHO ADJUSTMENT] menu.
3. Select [TIMING ADJ VALUE] to set the value for adjustment timing manually. The setting range is 0000 to 4095. The default settings for each radar are shown below;
   - Default for magnetron radar: [325]
   - Default for solid state radar: [43]
4. After the adjustment is completed, set the radar to the minimum range. Confirm that no echoes are "missing" at the center of the radar screen.If echoes are missing, do step 3 again.

3.4 How to Suppress Main Bang

Main bang is the clutter at the center of the screen that you typically see on the radar display, and it may mask close-in targets. If main bang appears at the screen center, suppress it as follows.

1. Transmit the radar on a long range and then wait ten minutes.
2. Adjust the gain to show a slight amount of noise on the display.
3. Select the 0.125 NM range, and turn off the **A/C SEA** and **A/C RAIN** controls.
4. Show the [RADAR INSTALLATION] menu, then select [ECHO ADJUSTMENT].
5. Select [MBS LEVEL], then set a value that causes the main bang to faintly disappear. The setting range is 0 to 255 (default: 0).

3.5 Other Settings

This section describes the menu items not previously described.

3.5.1 [ECHO ADJUSTMENT] menu

Open the main menu then select [RADAR INSTALLATION]→ [ECHO ADJUSTMENT] to open the [ECHO ADJUSTMENT] menu.

Page 1

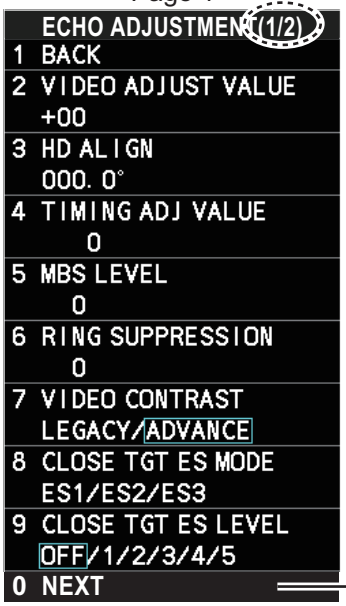

Go to page 2.

Page 2

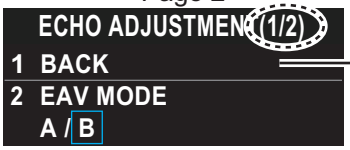

Go back to page 1.

[VIDEO ADJUST VALUE]

Adjust the video level manually to remove noise.

Preset the radar as follows:
- Interference Rejector (IR): 2
- Gain: 80
- Echo Stretch (ES): OFF
- Echo Averaging (EAV): OFF
- Range: 24 NM
- Pulse Length: Long

Set the value so that noise just disappears from the screen. The setting range is -32 to +32 (default: +32).

Note: The setting range is 0 to +31 (default: +12) when the [MODEL] setting is set to [50], see "[MODEL]" on page 3-12.

When using the number keys, the indication is first selected as a whole. At this time, you can toggle between plus "+" or minus "-". Press the **8** key for "-", press the **2** key for "+". If single digits are highlighted, toggle is not possible. In this case, press the **CANCEL/TRAILS** key to re-highlight the whole indication.

[RING SUPPRESSION]

Remove “ring” noise which appears with the waveguide type radars. Adjust so the rings disappear at the range of 0.125 m. The setting range is 0 to 255 (default: 1).

Note: This menu is **NOT** available when the [MODEL] setting is set to [50] (see "[MODEL]" on page 3-12).

[VIDEO CONTRAST]

Select [ADVANCE] to clarify the echo image difference (default: [ADVANCE]).

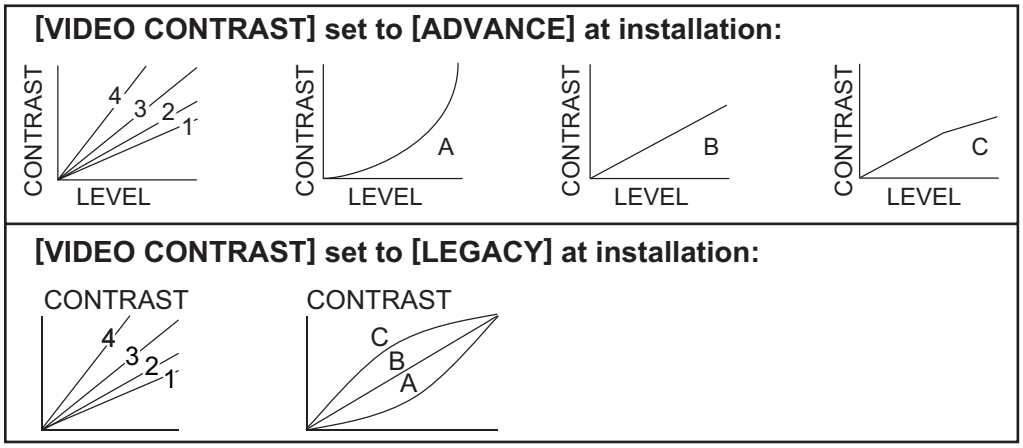

[CLOSE TGT ES MODE]

The [ECHO STRETCH] menu can enlarge the whole targets of the screen (Main menu → [ECHO] → [CUSTOMIZED ECHO] → [ECHO STRETCH]). This [CLOSE TGT ES MODE] feature can also enlarge targets around own ship in addition to the [ECHO STRETCH] feature.

This menu has three options, [ES1], [ES2] or [ES3]. Select the setting to enlarge the targets around own ship for the [ECHO STRETCH] setting ([1] to [3]).

- [ES1]: Select when enlarging the targets around own ship with selected [1] at [ECHO STRETCH].
- [ES2]: Select when enlarging the targets around own ship with selected [2] at [ECHO STRETCH].
- [ES3]: Select when enlarging the targets around own ship with selected [3] at [ECHO STRETCH].

Note: Multiple selections among [ES1], [ES2] and [ES3] are possible.

The each effect level depends on the following menu [CLOSE TGT ES LEVEL] ([OFF], [1] to [5]).

[CLOSE TGT ES LEVEL]

Select the effect level of the echo stretch around own ship which is selected in [CLOSE TGT ES MODE] among six enlarging patterns. The higher the number the greater the amount of stretch. To disable echo stretch, select [OFF] (default).

The six enlarging patterns are shown in the table below, “Distance 1” means that the distance is closer to the own ship, and “Distance 3” means that the distance gets farther. “Distance 3” is about half of display range.

Setting (Effect level pattern)	Distance 1	Distance 2	Distance 3
[OFF]	—	—	—
[1]	weak	weak	—
[2]	weak	weak	weak
[3]	Medium	weak	—
[4]	Medium	weak	weak
[5]	Strong	Medium	weak

3.5.2 [OWN SHIP INFO] menu

Enter the length and width of the ship, and scanner, GPS antenna and conning positions, referring to the description and figure below.

Note: This radar uses [CONNING POSITION] for CCRP and [SCANNER POSITION] for ANT as reference points for measurements and calculations. The commissioning engineer should understand this point, and enter own ship information accordingly.

Open the main menu then select [RADAR INSTALLATION]→ [OWN SHIP INFO] to open the [OWN SHIP INFO] menu.

Example

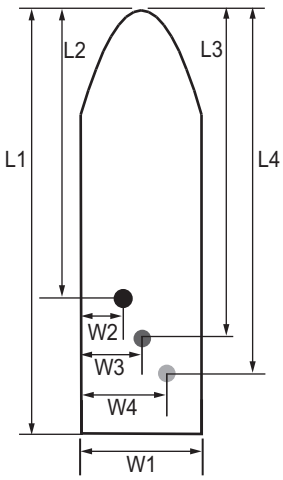

L1: Ship length
W1: Ship width
L2: Conning position (from bow)
W2: Conning position (from port)
L3: Scanner position (from bow)
W3: Scanner position (from port)
L4: GPS antenna position (from bow)
W4: GPS antenna position (from port)

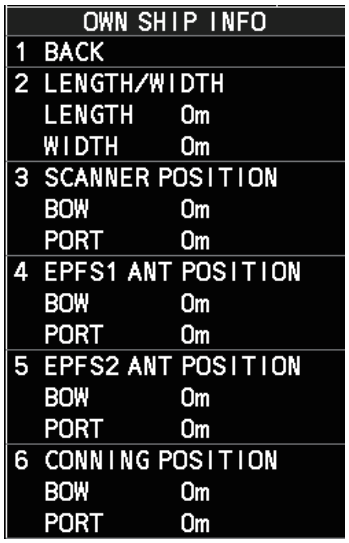

[LENGTH/WIDTH]

Enter the ship’s length and width (0 to 999, default: 0).

[SCANNER POSITION]

Enter the distance from the scanner to both bow and port (0 to 999, default: 0).

[EPFS1(2) ANT POSITION]

Enter the distance from the GPS antenna to both bow and port (0 to 999, default: 0). If a 2nd GPS antenna is installed, enter its position in [EPFS2 ANT POSITION].

[CONNING POSITION]

Enter the distance from the conning position to both bow and port (0 to 999, default: 0).

3.5.3 [SCANNER] menu

Open the main menu then select [RADAR INSTALLATION]→ [SCANNER] to open the [SCANNER] menu.

Note: [SCANNER] menu items differ depending on the software version, as shown in the figures to the right.

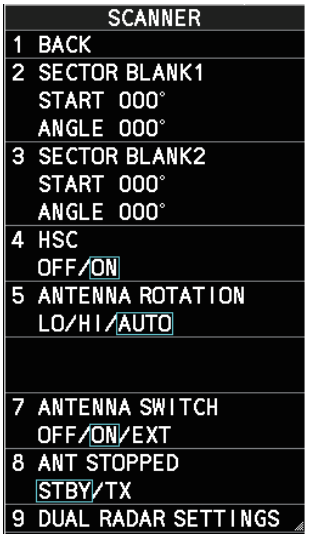

For the radars (software version “01.**”)

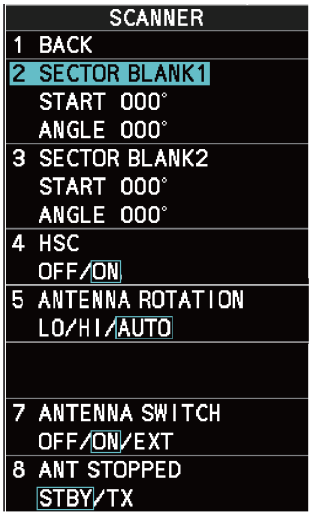

For the radars (software version “50.**”)

[SECTOR BLANK1(2)]

Set area(s) where to prevent transmission. Heading must be properly aligned (see section 3.2) before setting any blind sector. For example, set the area where an interfering object at the rear of the antenna would produce a dead sector (area where no echoes appear) on the display. To enter an area, enter start bearing relative to the heading and dead sector angle. To erase the area, enter 0 for both the [START] and [ANGLE] sections. The setting range of [START] is 0° to 359° (default: 000°) and [ANGLE] is 0° to 180° (default: 000°).

Note 1: Turn off a stern blind sector when adjusting the PM gain, to display the echo from the performance monitor properly.

Note 2: If the PM is active, these menus are **NOT** available on FAR-2x58 radars.

[HSC]

Select [ON] for HSC only.

Note: This menu is **NOT** available when the [MODEL] setting is set to [50] (see "[MODEL]" on page 3-12).

[ANTENNA ROTATION]

This menu is available when [HSC] is set to [ON].

Note 1: When this menu appears in gray, it is not available. The antenna rotation speed is fixed at 24 rpm.

Note 2: For 42 rpm S-band radars, the High Speed Kit (type: OP03-248, available as an optional extra) is required.

Select [LO] for 36 rpm, [HI] for 42 rpm. [AUTO] sets the normal rotation speed to 36 rpm and switches the rotation speed to 42 rpm when the short pulse is selected (default: [AUTO]).

```
5 ANTENNA ROTATION
  LO/HI/AUTO
```

[ANTENNA SWITCH]

Select [OFF] at [ANTENNA SWITCH] to prevent antenna rotation. For [EXT], set on/off from an external device (default: [ON]).

[ANT STOPPED]

For qualified technician. [ANT STOPPED] prevents transmission while the antenna is stopped in STBY (default: [STBY]).

[DUAL RADAR SETTINGS]

When installing two FAR-2xx8 series radars, the image from both radars (main radar and external radar) may be shown together on one radar display.

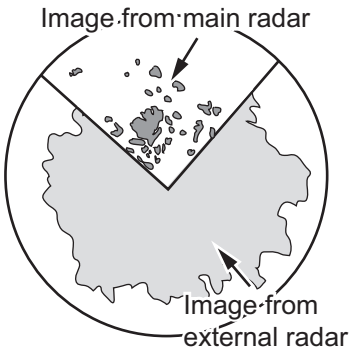

Note 1: This function is NOT available between the FAR-2xx8 radar and other radars.

Note 2: This function is available only for A/B type radars installed with software version “01.**”.

Note 3: When [COMBINE] is selected, some function are unavailable. The following table shows the available menus in the [RADAR INSTALLATION] menu when [COMBINE] is selected. For menu operations, see the Operator’s manual (OME-36520). The unavailable menus are displayed in gray.

[RADAR INSTALLATION] menu	Available menus
[ECHO ADJUSTMENT] [OWN SHIP INFO]	— (All menus are not available.)
[SCANNER]	[DUAL RADAR SETTINGS] except for [EXT RADAR]
[INSTALLATION]	[REMOTE MAINTENANCE], [SYSTEM MONITOR] and [ANT CABLE].
[TT PRESET]	— (All menus are not available.)
[BAUD RATE]	All menus are available.
[ALERT I/F SETTINGS] [INPUT PORT SETTINGS]	All menus are available.
[NETWORK SETTINGS]	[VDR SETTINGS], [RX SETTINGS]
[OTHER SETTINGS]	[OVERLAY1], [OVERLAY2], [EAV W/O GYRO], [ECDIS], [EXT BRILL CONTROL]

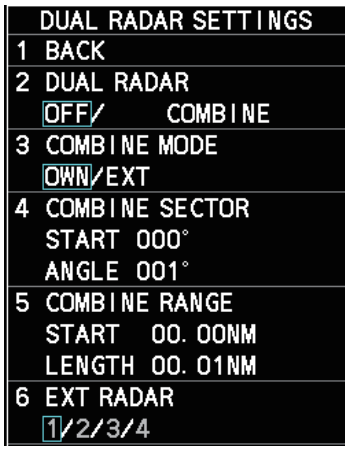

- [DUAL RADAR]: Select [COMBINE] to enable the dual radar display. If the radars other than FAR-2xx8 series radars are on the network, select [OFF].
  Note: When the [WAVE MODE] ([ECHO]→[WAVE MODE]) setting is [ON], this menu is displayed in gray and not operative.
- [COMBINE MODE]: Select the reference of the antenna position, own radar or external radar.
  [OWN]: Set own radar's antenna as the reference point and set display area of own radar. The area outside that set here is where the image from the external radar is displayed.
  [EXT]: Set the external radar's antenna as the reference point and set the display area of the external radar. The area outside that set here is where the image from own radar is displayed.
- [COMBINE SECTOR]: Set the start position and angle of the sector, referring to the example to the right.
  [START]: Start point of the sector (default: 000°, 000°to 359°)
  [ANGLE]: Horizontal width of the sector (default: 001°, 001°to 360°)

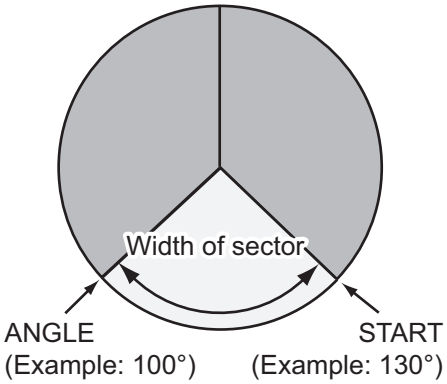

- [COMBINE RANGE]: Set the vertical width of sector.
  [START]: Distance from reference point to sector (default: 00.00, 00.00 to 99.99)
  [LENGTH]: Vertical length of sector (default: 00.01, 00.01 to 99.99)

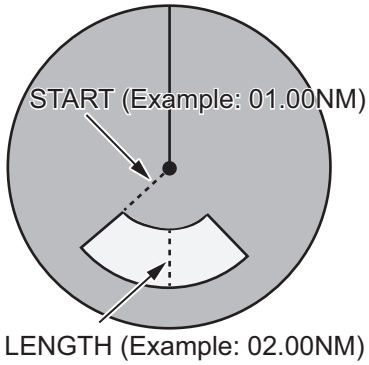

The setting example is shown in the figure below.

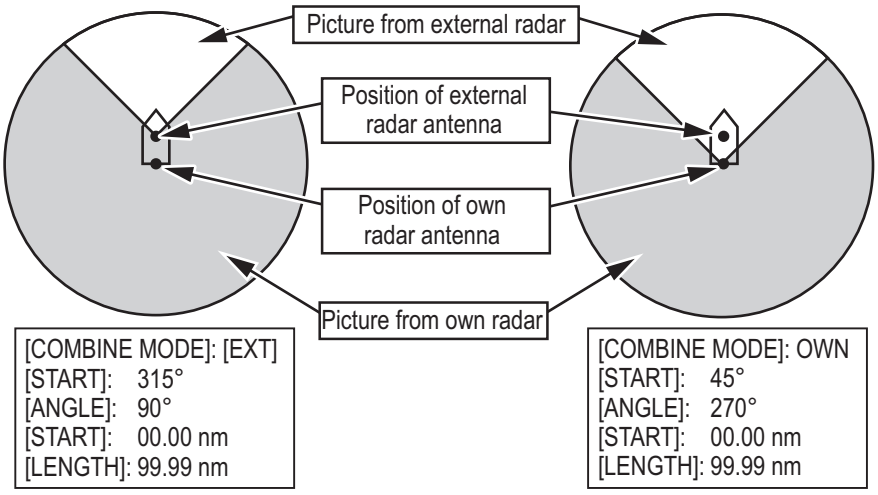

- [EXT RADAR]: Select the external radar for dual radar display. The available radar numbers are FAR-2xx8 series radars set on the [RADAR INSTALLATION] menu are valid.

  Note 1: On dual radar display, this setting is not operative. To change this setting, first set [DUAL RADAR] to [OFF].

  Note 2: The invalid radar numbers (Own radar, Other radars or radars not on the network) are displayed in gray.

3.5.4 [INSTALLATION] menu

Open the main menu then select [RADAR INSTALLATION]→ [INSTALLATION] to open the [INSTALLATION] menu through two pages. On the page 1, select [NEXT] to open the page 2.

Page 1

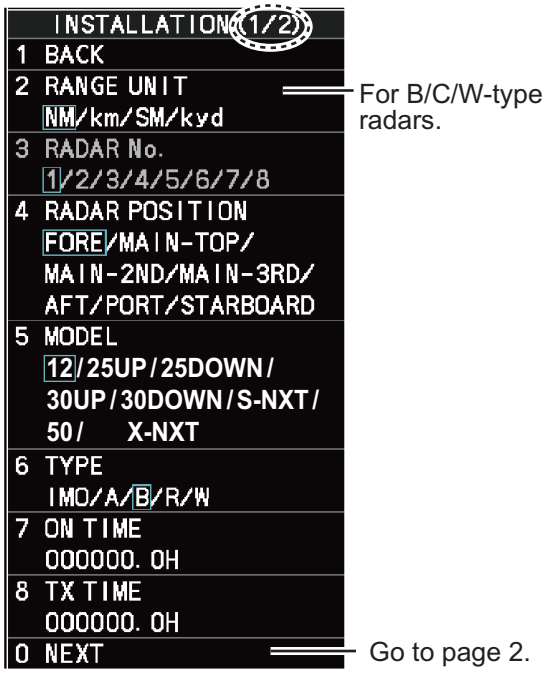

Page 2

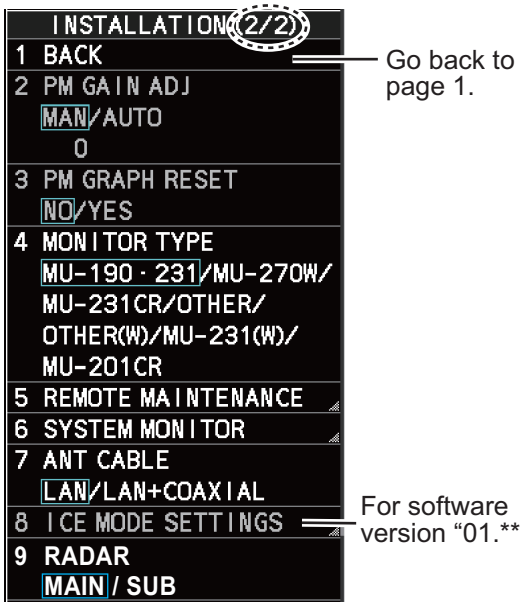

[RANGE UNIT]

For B/C/W-type radars, select the range unit, [NM], [SM], [KM] or [kyd] then push the left button. For the all other radar types, the range unit is fixed at [NM] so this menu is not shown.

[RADAR No.]

For multiple radar system using the network hub, set number (name) and antenna position for each system to easily distinguish the radar configuration.

- [1] to [4]: For main radar
- [5] to [8]: For sub radar

[RADAR POSITION]

Select the radar position. The choices are [FORE],[MAIN-TOP], [MAIN-2ND], [MAIN-3RD], [AFT], [PORT], and [STARBOARD].

[MODEL]

Confirm the model of your radar. This menu is set automatically according to the antenna. If this setting is different from your model, the radar will not function properly.

- [12]: For FAR-2218(-BB)/2318
- [25UP]: For FAR-2228(-BB)/2328
- [25DOWN]: For FAR-2328W
- [30UP]: For FAR-2238S(-BB)/2338S
- [30DOWN]: For FAR-2338SW
- [S-NXT]: For FAR-2238S-NXT(-BB)/2338S-NXT
- [50]: For FAR-2258(-BB)/2358
- [X-NXT]: For FAR-2228-NXT(-BB)/2328-NXT

[TYPE]

Select the type of radar.

Type	Contents	Software version	
		01.**	50.**
[IMO]	IMO specifications	✓	✓
[A]	Near-IMO specifications	✓	—
[B]	Non-Japanese fishing vessel specifications	✓	—
[C]	Japanese fishing vessel specifications	—	✓
[R]	Russian specifications	✓	—
[W]	Washington Ferry specifications	✓	—

(✓: Available, —: Not available)

[ON TIME], [TX TIME]

These items show the number of hours the radar has been turned on and transmitted, respectively. Value can be changed; for example, after replacing the magnetron. [TX TIME] can be reset to 0 for the magnetron radar. The setting range is [000000.0] to [999999.9] H (default: [000000.0]).

[PM GAIN ADJ]

Adjust the performance monitor, automatically or manually, whenever the magnetron is replaced. For automatic adjustment, no further operation is required; close the menu at the completion of the adjustment. For manual do as follows to adjust the performance monitor gain.

Note: This menu is **NOT** available when the [RADAR] setting is set to [SUB] for FAR-2x58 (see "[RADAR]" on page 3-14).

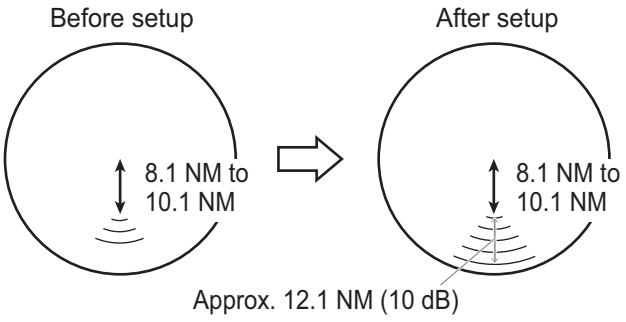

Ex: When [ARC] is set to [5]
(The location of arcs changes with the setting of [ARC] in [PERFORMANCE MON] in the [ECHO] menu.)

Preset the radar as follows:

- Range: 24 NM
- Pulse Length: Long
- A/C SEA: OFF (turn off manually)
- A/C RAIN: OFF (turn off manually)
- Echo Averaging (EAV): OFF
- Video Contrast: 2-B

1. Adjust the **GAIN** control so that a slight amount of white noise appears on the screen. Arcs for the performance monitor appear on the screen.
2. Select [PM GAIN ADJ] then spin the scrollwheel so that the outer arc faintly appears. The setting range is 0 to 255 (default: 255). Wait at least eight scans then right click to set.
   Note: Turn off a stern blind sector before adjusting the PM gain, to display the echo from the performance monitor properly.

[PM GRAPH RESET]

This menu is active only when the PM is connected to the Antenna Unit.

Select [YES] to reset all PM graphs, after replacing the magnetron.

Note 1: This menu is **NOT** available when the [RADAR] setting is set to [SUB] for FAR-2x58 (see "[RADAR]" on page 3-14).

Note 2: After the PM graphs are reset, adjust the [PM GAIN ADJ] setting on the radar.

[MONITOR TYPE]

The monitor type is preset at factory according to the radar type. For BB type radar, [MU-190•231] is set in advance. For other wide monitor, select [OTHER(W)].

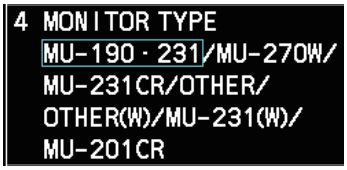

Note 1: [MU-231(W)] and [MU-201CR] are available only on the radars installed with software version “01.**”

Note 2: Select the monitor type correctly. If this menu is set to a wide monitor ([MU-270W], [OTHER(W)] or [MU-231(W)]) and no wide monitor is connected, the screen blacks out. In this case, set DIP switch SW2 to ON, in order to change the monitor type to MU-190/231.

Note 3: For A/B/C/W-type radars with Radar Plotter functionality, the [MU-231CR] setting is not used.

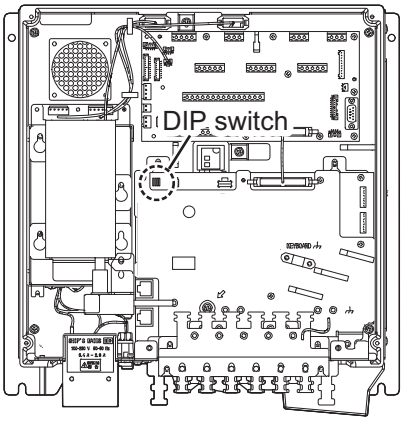

[REMOTE MAINTENANCE]

Adjust setting for remote maintenance.

[MAINTENANCE PROFILE]: Select [ON] to output the equipment profile for remote maintenance.

[SYSTEM MONITOR]

[DISP SYSTEM MONITOR]: Shows the system monitor data through three pages. The following operations are enabled:

F1 key: Goes to next page. After the last page, the system monitor window is not shown.

F3 key: Saves the text data for the displayed page to an SD card.

F4 key: Saves the screen shot for the displayed page to an SD card.

[ANT CABLE]

Select the method of connection between the radar sensor and the Processor Unit. [LAN] (LAN cable only) or [LAN+COAXIAL] (LAN and coaxial cables). Select [LAN+COAXIAL] when the optional LAN Signal Converter is installed.

```
7 ANT CABLE
  LAN/LAN+COAXIAL
```

[ICE MODE SETTINGS]

For the radars installed with software version *01.**". To activate this settings, the password is required. For the password, contact your dealer.

[RADAR]

Select radar from [MAIN] or [SUB] to activate the menu setting (default: [MAIN]).

Note: This menu is available only for the [MODEL] setting is set to [50] (see "[MODEL]" on page 3-12).

3.5.5 [TT PRESET] menu

Open the main menu then select [RADAR INSTALLATION]→ [TT PRESET] to open the [TT PRESET] menu.

```
TT PRESET
1 BACK
2 TT DATA OUTPUT
3 MAX RANGE
  24NM/32NM/48NM
4 TT ECHO LEVEL
  00
5 QV DISPLAY
  OFF/ON
6 TT W/O GYRO
  OFF/ON
7 ACQ PRESET
8 TRACK PRESET

0 DEFAULT
  NO/YES
```

[TT DATA OUTPUT]

Show the [TT DATA OUTPUT] menu.

```
TT DATA OUTPUT
1 BACK
2 SELECT SENTENCE
  OFF/TTM/TTD
3 TTM/TTD REFERENCE
  REL/TRUE
```

Note: Confirm the data input configuration for the equipment which will receive the TT (target tracking) sentence BEFORE setting this menu.

- [SELECT SENTENCE]: Select the sentence that is output the TT target data. (default: [TTM])
  [OFF]: For no output of the TT data.
  [TTM]: For connected equipment which can receive the TTM sentence.
  [TTD]: For connected equipment which can receive the TTD sentence.

- [TTM/TTD REFERENCE]: Set the output format for the tracked target's bearing (default: [REL]).
  [REL]: Outputs bearing and speed relative to own ship (default setting).
  [TRUE]: Outputs bearing to the north and speed over ground.

[MAX RANGE]

Select the maximum target tracking range, 24, 32 or 48 NM (default: [24NM]).

Note: [48NM] is available only for the [MODEL] setting is set to [50] (see "[MODEL]" on page 3-12).

[TT ECHO LEVEL]

Set the detection level of echoes. The setting range is 1 to 31 (default: 13).

[QV DISPLAY]

This function is used for diagnostic purposes.

- [OFF]: Normal picture (default)
- [ON]: Quantized video. Default setting is restored when the power is turned off.

[TT W/O GYRO]

Select [ON] to use TT without a gyro (default: [OFF]). If [OFF] is selected, TT can not used without gyro.

[ACQ PRESET]

Show the [ACQ PRESET] menu.

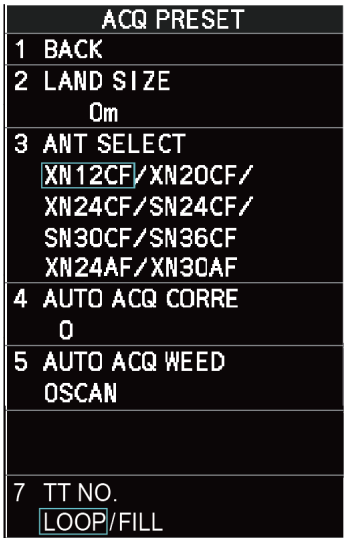

- [LAND SIZE]: Set the land size in units of 100 m. The setting range is 100 to 3000 m (default: 1600 m). A target whose length is equal to or greater than the length set here is judged as a land target.
- [ANT SELECT]: Set the antenna radiator type of your radar. The size of the echo changes with radiator size. Select the correct radiator type to ensure proper performance.
  Note 1: [SN24CF] and [SN30CF] are **NOT** available on IMO-type radars.
  Note 2: [XN24AF] and [XN30AF] are available only for the [MODEL] setting is set to [50] (see "[MODEL]" on page 3-12).
- [AUTO ACQ CORRE]: Set the correlation count of automatic acquisition. The setting range is [3] to [10] (default: [5]).
- [AUTO ACQ WEED]: Set the cancel count of automatic acquisition. The setting range is 1 to 5 scans (default: [1SCAN]).
- [TT No.]: Select how to enter TT No, [LOOP] or [FILL] (default: [LOOP]).
  Note 1: This menu is available on the radars installed with software version “50.**”. For C-type radars, this menu is selectable. For IMO-type radars, this setting is fixed at [LOOP].
  Note 2: This menu is not displayed on the radars installed with software version “01.**”.

[TRACK PRESET]

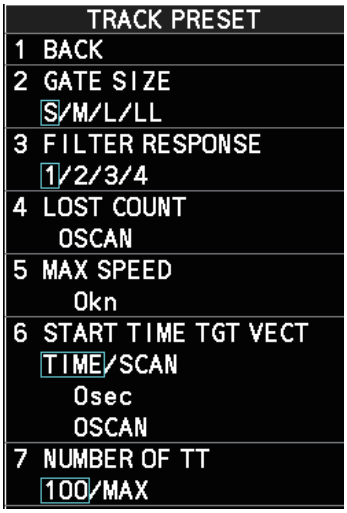

- **[GATE SIZE]**: Set the gate size among [S], [M], [L] or [LL] (default: [M])
- **[FILTER RESPONSE]**: Set the filter response function. The setting range is 1 to 4.
  [1]: Filter response is improved (default).
  [4]: Filter stability is improved.
- **[LOST COUNT]**: Set the number of scans to allow before a target is declared a lost target. The setting range is 1 to 20 scans (default: [9SCAN]).
- **[MAX SPEED]**: Set the maximum tracking speed. The setting range is 40 to 150 kn (default: [150kn]).
- **[START TIME TGT VECT]**: Set the number of seconds or number of scans to wait before showing the vector for a newly acquired target. Select [TIME] or [SCAN] then enter value.
  [TIME]: The setting range is 0 to 100 sec (default [0sec]).
  [SCAN]: The setting range is 0 to 40 scans (default [0SCAN]).
- **[NUMBER OF TT]**: The setting [100] can not be changed.

[DEFAULT]

Select [YES] to restore the default settings for the [TT PRESET] menu.

3.5.6 [BAUD RATE] menu

Set the baud rate, 4800 or 38400 (bps), for connected equipment - heading sensor, AIS transponder, GPS navigator, Log, AMS, and ECDIS.

Note: For IMO-type radars, [HDG] and [AIS] is fixed to [38400].

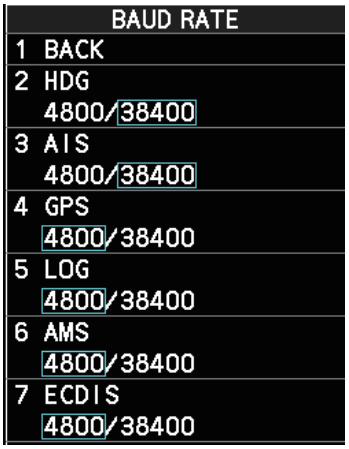

3.5.7 [ALERT I/F SETTINGS] menu

Four alert contact outputs are available, [ALERT OUT1] to [ALERT OUT4].

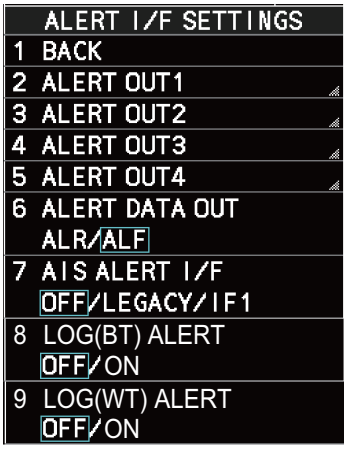

[ALERT OUT 1] to [ALERT OUT 4]

Select the alert to output for each alert out number through four pages. To monitor for unit failure if and when it occurs, set the alert contact outputs referring to the table below.

Unit	Alert	
Antenna Unit Transceiver Unit	• NO AZIMUTH SIGNAL • NO HEADLINE SIGNAL • NO TRIGGER SIGNAL • NO VIDEO SIGNAL • NO TUNE GATE SIGNAL	• TUNE ERROR • RADAR SENSOR COM ERR • MTR-DRV COM ERROR • RF-CONVERTER COM ERR
Performance monitor	PM COM ERROR	
Control Unit	CTRL UNIT COM ERR	

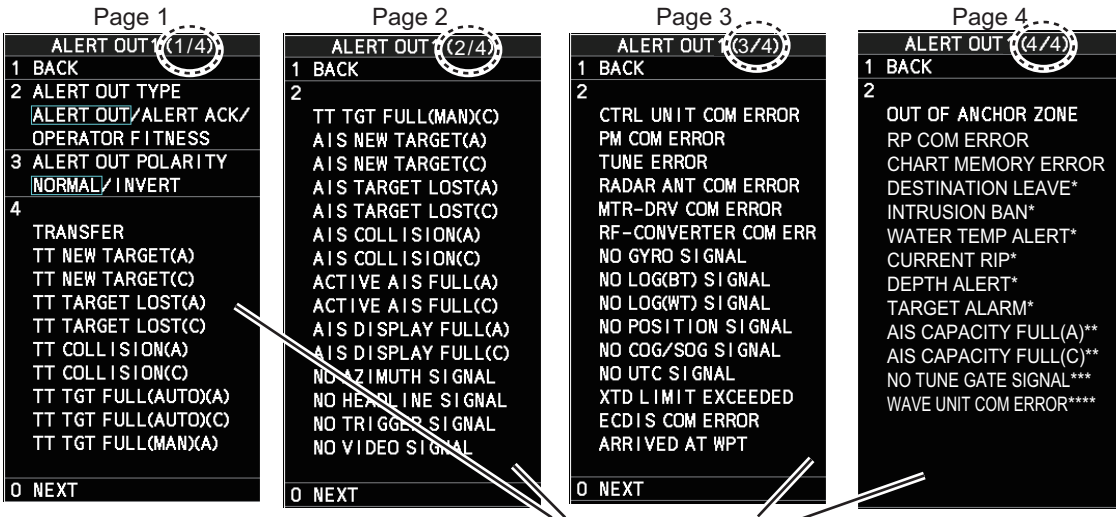

[NEXT]: Go to next page.
[BACK]: Go back to previous page.

Setting alert list

*: For C-type radars only
**: For R-type radars only
***: For FAR-2x58
****: For other than C-type radar

To monitor for Processor Unit failure, connect SYS_FAIL and PWR_FAIL from terminal J613 in the Processor Unit to the AMS.

- [ALERT OUT TYPE]: Select the alert out type.
  [ALERT OUT]: Alert out when the alert occurs (default).
  [ALERT ACK]: Alert out when the alert is acknowledged.
  [OPERATER FITNESS]: Alert out until the alert is acknowledged by the ACK operation.

- [ALERT OUT POLARITY]: Select the alert out polarity, [NORMAL] (default) or [INVERT].
  Note: For category A alert, there are two types of output operations, “A” and “C”. To inform the AMS of category A alerts via contact signal, connect both “A” and “C” signals.
  (A): Alert sound is output when the corresponding item is an unacknowledged alert. Output is stopped when the item is acknowledged.
  (C): Alert sound is output when the corresponding item becomes an alert condition. Output is stopped when the alert condition is removed.The table below shows the operational status of the alert outputs based on the output type.

Output type	Status			
	Normal	A new alert is occurred	An existing alert is acknowledge	An existing alert condition becomes non-active
A	Off	On	Off	Off
C	Off	On	On	Off

- [TRANSFER]: For category A alert, when the 60 seconds have passed under unsolved or unacknowledged condition after the alert occurs, transfer the alert to contact output for AMS. If the alert is removed or acknowledged, the contact output is inactive.
- Setting alert list: Select the alert to activate. The activated alerts are indicated with an underline.
  For example shown in the right figure, [TT NEW TARGET(A)] and [TT TARGET LOST(A)] are activated.

  The available alerts are as follows:

- TT NEW TARGET(A)
- TT NEW TARGET(C)
- TT TARGET LOST(A)
- TT TARGET LOST(C)
- TT COLLISION(A)
- TT COLLISION(C)
- TT TGT FULL(AUTO)(A)
- TT TGT FULL(AUTO)(C)
- TT TGT FULL(MAN)(A)
- TT TGT FULL(MAN)(C)
- AIS NEW TARGET(A)
- AIS NEW TARGET(C)
- AIS TARGET LOST(A)
- AIS TARGET LOST(C)
- AIS COLLISION(A)
- AIS COLLISION(C)
- ACTIVE AIS FULL(A)
- ACTIVE AIS FULL(C)
- AIS DISPLAY FULL(A)
- AIS DISPLAY FULL(C)
- NO AZIMUTH SIGNAL
- NO HEADLINE SIGNAL
- NO TRIGGER SIGNAL
- NO VIDEO SIGNAL
- CTRL UNIT COM ERROR
- PM COM ERROR
- TUNE ERROR
- RADAR ANT COM ERROR
- MTR-DRV COM ERROR
- RF-CONVERTER COM ERR
- NO GYRO SIGNAL
- NO LOG(BT) SIGNAL
- NO LOG(WT) SIGNAL
- NO POSITION SIGNAL
- NO COG/SOG SIGNAL
- NO UTC SIGNAL
- XTD LIMIT EXCEEDED
- ECDIS COM ERROR
- ARRIVED AT WPT
- OUT OF ANCHOR ZONE
- RP COM ERROR
- CHART MEMORY ERROR
- DESTINATION LEAVE*
- INTRUSION BAN*
- WATER TEMP ALERT*
- CURRENT RIP*
- DEPTH ALERT*
- TARGET ALARM*
- AIS CAPACITY FULL(A)**
- AIS CAPACITY FULL(C)**
- NO TUNE GATE SIGNAL***
- WAVE UNIT COM ERROR****

*: For C-type radars **: For R-type radars ***: For FAR-2x58
****: For other than C/type radars

ALERT DATA OUT

Select the alert output format, [ALR] (Set Alarm State) or [ALF] (Alert Sentence, default).

AIS ALERT I/F

Set the AIS alert interface.

[OFF] does not output AIS alerts (default).
[LEGACY]: For connection to FA-100, FA-150 or FA-170 where the AIS mode is [LEGACY].
[IF1]: For connection to FA-150 or FA-170 where the AMS mode is [AlertIF1].

LOG(BT) ALERT

Select [ON] to activate alert "NO LOG(BT) SIGNAL" for signal loss of speed over ground.

LOG(WT) ALERT

Select [ON] to activate alert "NO LOG(WT) SIGNAL" for signal loss of speed through water.

3.5.8 [INPUT PORT SETTINGS] menu

The input signals to the ports on the Processor Unit are shown below.

Default setting

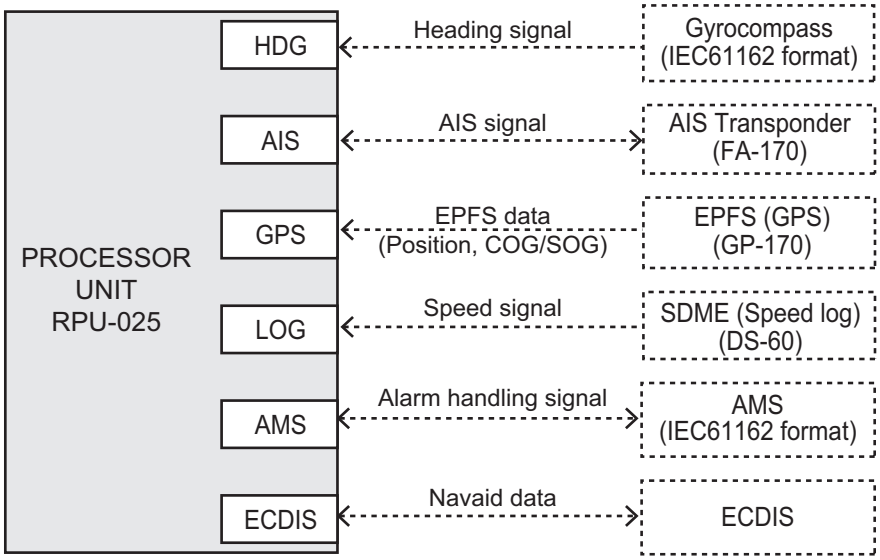

Setting for multiple sensors

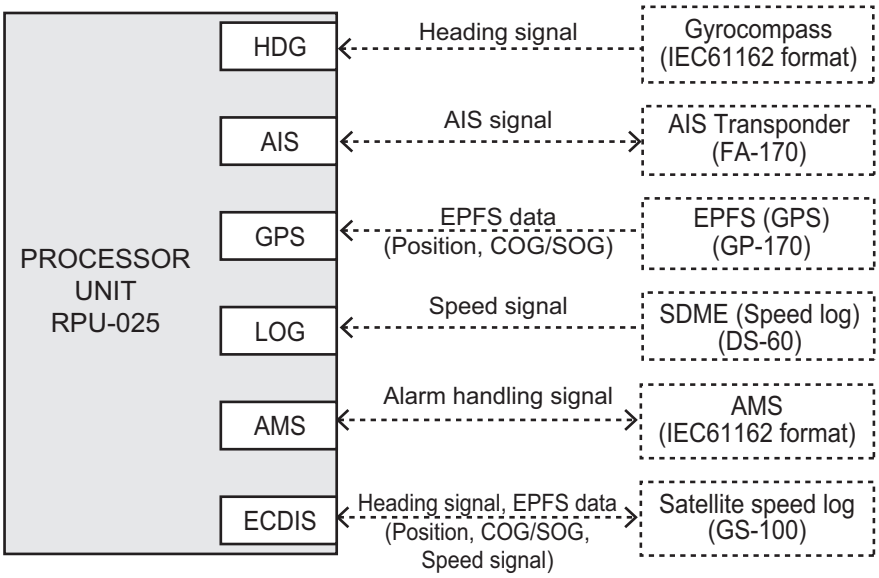

The input signal setting for each port can be set in the [INPUT PORT SETTINGS] menu.

Open the main menu then select [RADAR INSTALLATION]→ [INPUT PORT SETTINGS] to open the [INPUT PORT SETTINGS] menu.

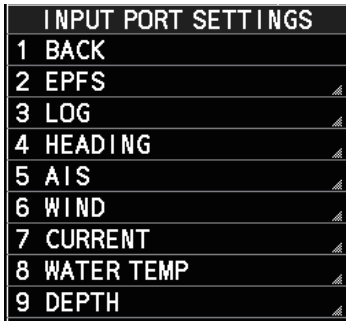

How to set the port setting of each data;

1. Select the data for port setting in the [INPUT PORT SETTING] menu.
2. Select the port setting, [SERIAL] or [LAN2].
3. For serial port connections, select the source in [SERIAL SETTING].
   Note: [AMS] is not available for IMO-type radars.
4. For LAN2 port connections, enter the connected equipment ID at [LAN2 SETTING] with the software keyboard.
5. To give the GLL sentence priority, set [PRIORITIZE GLL] to [ON].

Set the port setting of each data shown below according to the above procedure.

[EPFS]

The GPS navigator data has two ports to input the source data shown in the following figure. The GPS navigator is set to [EPFS1] and [EPFS2] ports in [EPFS]. For multiple signal input, set the ports as follows:

[EPFS1 SERIAL SETTINGS]→ [GPS]
[EPFS2 SERIAL SETTINGS]→ [ECDIS]

EPFS (1/2)
1 BACK
2 EPFS1 PORT SETTING SERIAL/LAN2
3 EPFS1 SERIAL SETTING GPS/LOG/ECDIS/HDG/ AMS
4 EPFS1 LAN2 SETTING GP0001
5 EPFS2 PORT SETTING SERIAL/LAN2
6 EPFS2 SERIAL SETTING GPS/LOG/ECDIS/HDG/ AMS
7 EPFS2 LAN2 SETTING GP0002
8 PRIORITIZE GLL OFF/ON
0 NEXT

EPFS (2/2)
1 BACK
2 EPFS1 INPUT DTM SEL. WGS-84/TOKYO
3 EPFS2 INPUT DTM SEL. WGS-84/TOKYO

Note: Do not set the same value for port1 and port 2. For example, where [EPFS1] is set as [GPS], [EPFS2] must be set to other than [GPS].

- [PRIORITIZE GLL]: Select [ON] to give priority to GLL data.
- [EPFS1(2) INPUT DTM SEL.]: For C-type radars, select the datum for sensor data input.

[LOG], [HEADING]

The speed data and heading data have two ports to input the source data shown in the following figure.

LOG
1 BACK
2 LOG1 PORT SETTING SERIAL/LAN2
3 LOG1 SERIAL SETTING GPS/LOG/ECDIS/HDG/ AMS
4 LOG1 LAN2 SETTING VD0001
5 LOG2 PORT SETTING SERIAL/LAN2
6 LOG2 SERIAL SETTING GPS/LOG/ECDIS/HDG/ AMS
7 LOG2 LAN2 SETTING VD0002

For speed data

HEADING
1 BACK
2 GYRO1 PORT SETTING SERIAL/LAN2/AD-10
3 GYRO1 SERIAL SETTING GPS/LOG/ECDIS/HDG/ AMS
4 GYRO1 LAN2 SETTING HE0001
5 GYRO2 PORT SETTING SERIAL/LAN2/AD-10
6 GYRO2 SERIAL SETTING GPS/LOG/ECDIS/HDG/ AMS
7 GYRO2 LAN2 SETTING HE0002

For heading data

- **Speed data**: [LOG1] and [LOG2] ports in [LOG].
  For multiple signal input, set the ports as follows:
  [LOG1 SERIAL SETTINGS]→ [LOG]
  [LOG2 SERIAL SETTINGS]→ [ECDIS]
- **Heading data**: [HDG1] and [HDG2] ports in [HEADING]
  For multiple signal input, set the ports as follows:
  [GYRO1 SERIAL SETTINGS]→ [HDG]
  [GYRO2 SERIAL SETTINGS]→ [ECDIS]

Note: Do not set the same value for port1 and port 2. For example, where [LOG1] is set as [LOG], [LOG2] must be set to other than [LOG].

[AIS], [WIND], [CURRENT], [WATER TEMP], [DEPTH]

Select the input source for each data type; AIS, wind data, current data, water temperature and depth data. These data have only one input port.

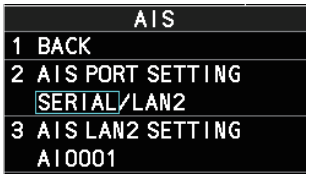

For AIS

For wind data

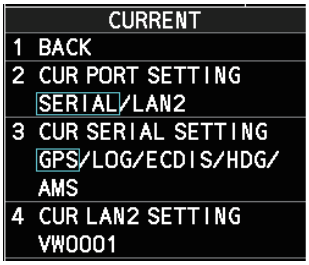

For current data

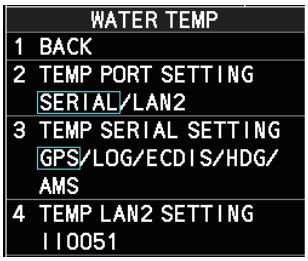

For water temperature

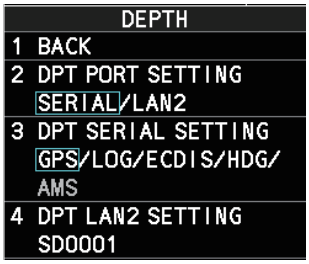

For depth data

3.5.9 [NET WORK SETTINGS] menu

Open the main menu then select [RADAR INSTALLATION]→ [NEXT]→ [NETWORK SETTINGS] to open the [NETWORK SETTINGS] menu.

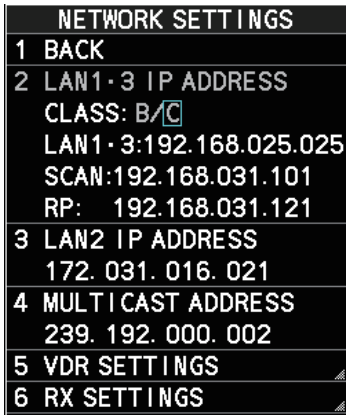

Note 1: Network settings should be done while the radar is disconnected from the LAN network, as a standalone radar.

Note 2: The system restarts automatically after the network settings are changed.

Note 3: When you change the radar number, this equipment restarts automatically. After restarting, confirm the IP address in [NETWORK SETTINGS].

[LAN1•3 IP ADDRESS]

For multiple radar systems using the network hub, the IP address is assigned according to the radar No (See "[RADAR No.]" on page 3-11). Set the IP address as shown in the following table. For C-type and A/B-type radars with Radar Plotter functionality, a dedicated IP address is assigned.

Also, select the network type, CLASS C or B. When FAR-2xx8 radar is connected to FEA-2xx7 series (ECDIS), set CLASS B.

Note: Do not set an IP address other than the address that corresponds to your radar number and class in the following table.

CLASS C			CLASS B		
Radar No.	LAN1	LAN3	Radar No.	LAN1	LAN3
No.1	192.168.31.21 (192.168.31.121*)	192.168.31.101	No.1	172.31.3.35 (172.31.3.43*)	172.31.3.6
No.2	192.168.31.22 (192.168.31.122*)	192.168.31.102	No.2	172.31.3.36 (172.31.3.44*)	172.31.3.7
No.3	192.168.31.23 (192.168.31.123*)	192.168.31.103	No.3	172.31.3.37 (172.31.3.45*)	172.31.3.8
No.4	192.168.31.24 (192.168.31.124*)	192.168.31.104	No.4	172.31.3.38 (172.31.3.46*)	172.31.3.9
No.5	192.168.31.25 (192.168.31.125*)	—	No.5	172.31.3.39 (172.31.3.47*)	—
No.6	192.168.31.26 (192.168.31.126*)	—	No.6	172.31.3.40 (172.31.3.48*)	—
No.7	192.168.31.27 (192.168.31.127*)	—	No.7	172.31.3.41 (172.31.3.49*)	—
No.8	192.168.31.28 (192.168.31.128*)	—	No.8	172.31.3.42 (172.31.3.50*)	—

*: **For C-type and A/B-type radars with Radar Plotter functionality**

[LAN2 IP ADDRESS]

The IP address is assigned according to the radar No (See "[RADAR No.]" on page 3-11). Set the IP address as shown below. This IP address can be changed as required.

Radar No.	LAN2	SFID
No.1	172.31.16.11	RA0011
No.2	172.31.17.11	RA0012
No.3	172.31.16.12	RA0013
No.4	172.31.17.12	RA0014
No.5	172.31.16.13	RA0015
No.6	172.31.17.13	RA0016
No.7	172.31.16.14	RA0017
No.8	172.31.17.14	RA0018

[MULTICAST ADDRESS]

Set the multicast address with the cursor and the keypad.

[VDR SETTINGS]

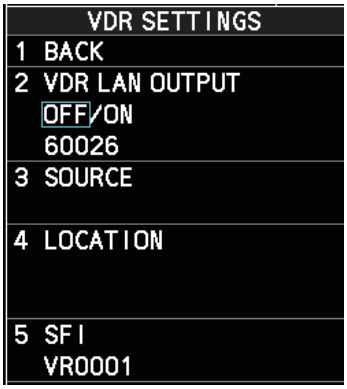

Note: This menu is **NOT** available for C-type radars.

- [VDR LAN OUTPUT]: Select [ON] to output the VDR signal through LAN connection.
  For [ON], set the multicast port with the software keyboard.
- [SOURCE]: Set the status and information text, max 16 characters with the software keyboard (Example: "Xband.1").
- [LOCATION]: Set the status and information text, max 32 characters with the software keyboard (Example: "No1").

- [SFI]: Set the SFI. The talker of the device is alphanumeric, two characters followed by four numerals.

The device and channel information to be transmitted to VDR are shown below.

Radar No.	Device	Channel	Radar No.	Device	Channel
No.1	75	1	No.5	79	1
No.2	76	1	No.6	80	1
No.3	77	1	No.7	81	1
No.4	78	1	No.8	82	1

[RX SETTINGS]

Select [ON] to receive the following data signals:

- [MISC]: Other equipment data (sensor of engine etc.)
- [TGTD]: Target data
- [SATD]: Satellite data
- [NAVD]: Navigation data
- [TIME]: Time
- [PROP]: Specified data by manufacturer or user

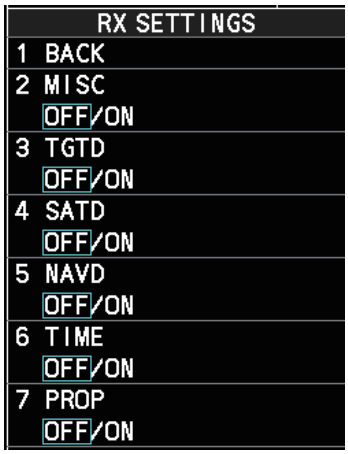

3.5.10 [OTHER SETTINGS] menu

Open the main menu then select [RADAR INSTALLATION]→ [NEXT]→[OTHER SETTINGS] to open the [OTHER SETTINGS] menu through two pages. On the page 1, select NEXT to open the page 2..

Page 1

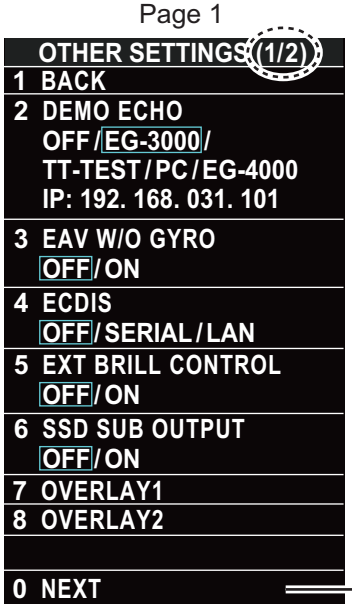

Go to page 2.

Page 2

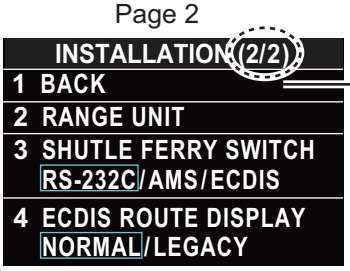

Go back to page 1.

[DEMO ECHO]

Select the type of simulated echo to use. [EG-3000] (Echo Generator), [TT-TEST], [PC] or [EG-4000]. Select [OFF] to deactivate this feature (default: [OFF]).

[EAV W/O GYRO]

The echo averaging feature can be used without a gyrocompass. Select [ON] to use the feature without a gyrocompass (default: [OFF]).

[ECDIS]

Select the ECDIS communication method, [SERIAL] or [LAN]. Select [OFF] for no ECDIS connection (default: [OFF]).

[EXT BRILL CONTROL]

Select [ON] to adjust the brilliance of the monitor unit from external equipment.

[SSD SUB OUTPUT]

Note: Not used with magnetron radars.

For solid state radars (FAR-2238S-NXT(-BB)/FAR-2338S-NXT), if the digital signal can be output in analog format to a sub monitor, select [ON].

[OVERLAY1 (2)]

Note: This menu is **NOT** available for C-type radars.

When an ECDIS is connected, the radar picture can be overlaid on the ECDIS. Set the items on this menu to correctly overlay the radar picture on ECDIS.

Note: The overlay output is less accurate than the sub monitor output from the Antenna Unit, especially in the areas mentioned below. Therefore, only use the overlay with an ECDIS.

- Distance accuracy/resolution
- Bearing accuracy/resolution
- Sweep
- Echo picture
- Range

When the echo image is **NOT** used with ECDIS, use the signal from the Antenna Unit.

[RP UPDATE]

For C-type and A/B/W radars with Radar Plotter functionality, conduct updates for the RP board (CC6).

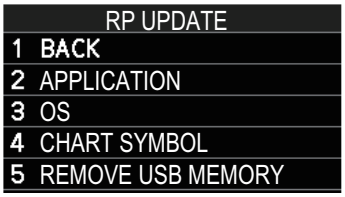

- [APPLICATION]: Update the RP board (CC6) software.
- [OS]: Update the RP board (CC6) OS (operating system).
- [CHART SYMBOL]: Update the RP board (CC6) chart symbols.
- [REMOVE USB MEMORY]: Remove a USB flash memory from the RP board (CC6).

[SHUTTLE FERRY SWITCH]

Note: This menu is **NOT** available for C-type radars.

Select a port to detect a navigation direction of a shuttle ferry (default: [RS-232C]).

[ECDIS ROUTE DISPLAY]

Note: This menu is **NOT** available for C-type radars.

Select [NORMAL] to show the routes with a straight lines, [LEGACY] to show the routes with a curve lines.

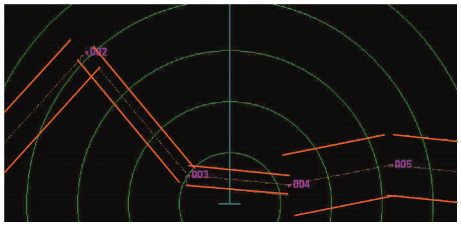

[NORMAL]
（Straight line）

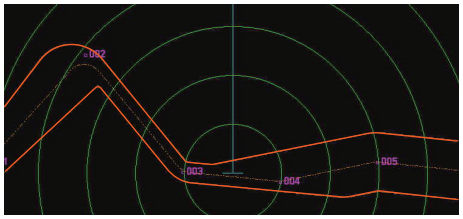

[LEGACY]
（Curve line）

3.6 How to Control Charts

This section shows you how to install or update charts for C-type and A/B/W radars with Radar Plotter functionality.

3.6.1 How to install charts

Note: Save the chart data to a USB flash memory first. You do not need to create a folder.

1. Connect the USB flash memory with chart data to the USB drive from the RP board.
2. Press the **MENU** key to open the main menu.
3. Select [INITIAL SETTINGS].
4. Select [UPDATE CHART]. The following message appears.

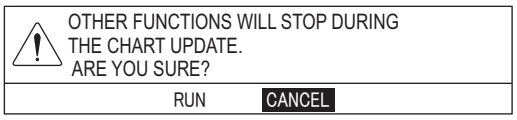

5. Select [RUN]. The message "PROCESSING. PLEASE WAIT." appears, then the [CHART ADMINISTRATION] menu appears.

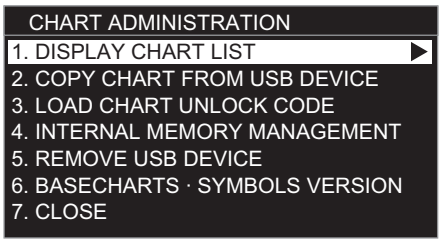

6. Select [COPY CHART FROM USB DEVICE] to display the list for data in the USB flash memory.
7. Select the chart data to copy.

8. Select [SELECT CHART TO COPY]. The confirmation message appears.
9. Select [RUN] to copy the chart data.
10. Click the left button.
11. Do one of the following methods to unlock the chart data.
    How to unlock the chart data automatically
    Note: Save the unlock code to the USB flash memory first. The file extension is “uc”.
    1) Select [LOAD CHART UNLOCK CODE] in the [CHART ADMINISTRATION] menu to display the list for data in the USB flash memory.
    2) Select the file for the unlock code. The confirmation message appears.
    3) Select [RUN]. The message "UNLOCK CODE VERIFIED." appears.
    4) Click the left button.

    How to unlock the chart data manually
    1) Select [1. DISPLAY CHART LIST] in the [CHART ADMINISTRATION] menu to display the chart list.
    2) Select the locked chart data (displayed with yellow letters), then click the left button to display the character entry window.
    3) Set the unlock code as described below.
       Operate the trackball or the wheel to select a character, then click the left button to confirm selection. Repeat this step to select all other characters. Select [ENTER] then click the left button.
       The message "UNLOCK CODE VERIFIED." appears.
    4) Click the left button.
12. When unlocking the chart data automatically, select [5. REMOVE USB DEVICE]. The message "USB DEVICE CAN BE SAFELY REMOVED." appears. Click the left button then remove the USB device.
13. Select [CLOSE]. The confirmation message appears.
14. Select [RUN]. The system restarts.

3.6.2 How to update charts

Note 1: Save the chart data to a USB flash memory first. You do not need to create a folder.

Note 2: Before updating charts, delete the old chart data. If needed, take backups for an unlock code.

1. Connect the USB flash memory with chart data on it in the USB drive from the RP board.
2. Press the **MENU** key to open the main menu.
3. Select [INITIAL SETTINGS].
4. Select [UPDATE CHART]. The following message appears.

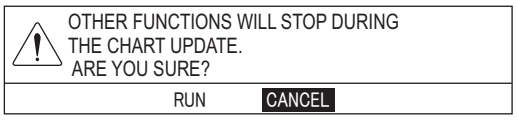

5. Select [RUN]. The message "PROCESSING. PLEASE WAIT." appears, then the [CHART ADMINISTRATION] menu appears.
   After restarting, the unlock code is saved in the USM flash memory. The file name is 20 characters of this system ID, file extension: uc.

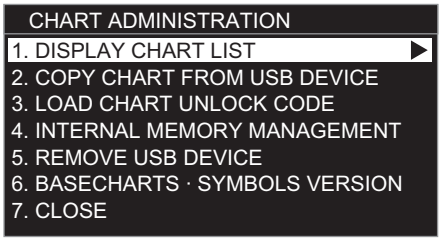

6. Select [DISPLAY CHART LIST] to display the chart list.
7. Select the chart data to delete then press the **F1** key.
8. Select [RUN]. The message "CHART DELETION COMPLETE" appears.
9. Click the left button.
10. Follow steps 6 to 14 in paragraph 3.6.1.

4. INPUT/OUTPUT DATA

NOTICE

IMO-type radar(s) must be interconnected to the following type approved sensors.
For other radar types, it is recommended to connect the following type approved sensors:
- **EPFS meeting the requirements of the IMO resolution MSC.112(73).**
- **Gyrocompass (or equivalent devices) meeting the requirements of the IMO resolution A.424(XI).**
- **SDME meeting the requirements of IMO resolution MSC.96(72).**

The radar may be interconnected via HUB-3000 to other FURUNO processing units having approved LAN ports.

4.1 Processor Unit

Input and output data are shown in the table below.

Note: This radar accepts position data fixed by WGS-84 geodetic datum only. Set the datum to WGS-84 on the EPFS (GPS, etc.) connected to this radar. If other type of datum is input, the error message "DATUM" appears and the AIS feature is inoperative.

Input

Data	Specification	Contents	Remarks
Heading signal	AD-10 format	External AD-100	AD-10 and IEC 61162 are switched by menu setting.
	IEC 61162-2*, IEC 61162-450		
Speed signal	IEC 61162-1, IEC 61162-450		
Navaid data	IEC 61162-1	Position, course, speed, waypoint, route, time, wind data, current data, depth, temperature, roll, pitch	For IMO-type, IEC-61162-1 Edition 5 is required.
	IEC 61162-450		
Alarm handling signal	Contact closure		Input from bridge alert management system (BAMS)
	IEC 61162-1, IEC 61924-2	ACK, ACM, HBT	Input from BAMS ACK and ACM are switched by menu setting.
AIS signal	IEC 61162-2, IEC 61162-450		
Consort signal**	NMEA0183		
GPS buoy signal**	NMEA0183		

*: Data input cycle must be more than 40 Hz (high speed craft) or 20 Hz (conventional ships).

**: For C-type radars only

Output

Data	Specification	Contents	Remarks
Radar system data	IEC 61162-1, RS-232C, IEC 61162-450	RSD, OSD, TLL	For ECDIS, PC plotter
TT data**	IEC 61162-1, IEC 61162-450	TTD, TTM, TLB	For ECDIS
Alert handling signal	IEC 61162-1, IEC 61924-2, IEC 61162-450	ALR, ALF, ALC, ARC, HBT, EVE	For BAMS ALR and ALF are switched by menu setting.
Sub monitor signal	HD, BP Trig-ger, Video		1 port for radar 2 ports for ECDIS
External LCD monitor signal	DVI	Same as main display unit	2 systems in total
VDR	R, G, B, H, V, IEC 61162-450	Same as main display unit	1 port
Alert signal	Contact closure	Output to alarm system by using photo-relay	4 systems, Output contents are selected by menu.

**: These sentences are output in order of targets close to the own ship. The output sentence and mode can be set at the [TT PRESET] menu (See section 3.5.5). The baudrate can be set at the [BAUD RATE] menu (See section 3.5.6).

IEC 61162 input sentence and priority

Contents	Sentence and priority
Heading (True)*1	THS>HDT*1*2>VHW*4>HDG*5
Heading (Magnetic)*5	HDG*5>HDM*5>VHW*4
Magnetic deviation*5	HDG*5>RMC
AIS target message, alert	VDM, VDO, VSD, ABK, ALR
Date, Time	ZDA
Position*3	GNS>GGA>RMC>GLL or GLL>GNS>GGA>RMC
Datum	DTM
Course over the ground	VTG>RMC
Speed over the ground (SOG)(GPS)	VTG>RMC
Speed over the ground (LOG (BT))	VBW
Speed through the water (STW)	VBW>VHW
Alert handling	ACK, ACN, HBT
Waypoint	RMB>BWR>BWC
Route	WPL, RTE
Wind Speed and angle (Theoretical, True)	MWV>VWT*2
Wind Speed and angle (relative)	MWV>VWR*2
Depth	DPT >DBT>DBS*2>DBK*2
Water Temperature	MTW
Current	VDR, CUR
Rate of turn	ROT
Monitor Setting	DDC, RAQ

*1: THS and HDT are IEC 61162-2. All other sentences are IEC 61162-1 ed5.
*2: For retrofit.
*3: To priority of GLL data, see "[PRIORITIZE GLL]" on page 3-21.
*4: This is **NOT** available for IMO-type radars installed with software version “01.**”.
*5: For C-type radars.

IEC 61162 output sentence

Contents	Sentence and priority
Target L/L	TLL*6
Radar system data	RSD
Own ship data	OSD
TT target data	TTD, TLB, TTM
Alert handling	ALR, ALF, ALC, ARC, HBT
Activity information	EVE
AIS target message, alert	ABM, BBM, ACK, VSD
Monitor Setting	DDC

*6: This is **NOT** available for IMO/A/R-type radars installed with software version “01.**”.

4.2 Sub Monitor

The specifications and timing of sub monitor signals are shown below.

Signal Name	Specification	Signal and timing
OP_HD_ OUT	• Voltage (V): 0 to 12 V • Impedance: 110 Ω • Pulse width (PW): 216 to 432 ms 0.625 s (24 rpm, ECDIS overlay) 0.357 s (42 rpm, ECDIS overlay) • Pulse interval (PI): 2.5 s (24 rpm) 1.4 s (42 rpm) • Logic: Negative	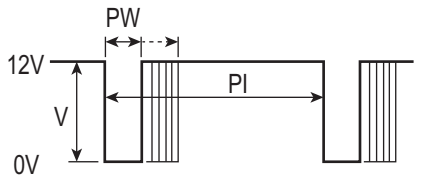
OP_BP_ OUT	• Voltage (V): 0 to 12 V • Impedance: 110 Ω • Interval (t): 6.9 ms (24 rpm) 4.0 ms (42 rpm)	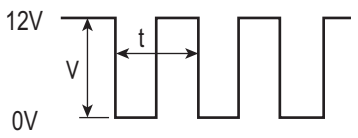

Signal Name	Specification	Signal and timing
OP_TRIG_ OUT	• Voltage (V): 0 to 12 V • Impedance: 110 Ω • Pulse width (PW): 5 to 15 μs (magnetron radar) 8 μs (solid state radar) 5 μs (ECDIS overlay)	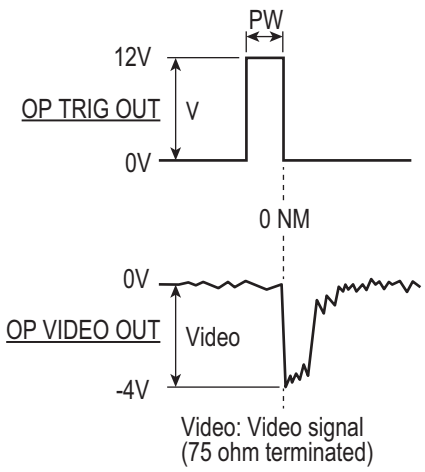
OP_VIDEO _OUT	• Video: 4 Vp-p/100 dB • Impedance: 75 Ω	

APPENDIX 1 JIS CABLE GUIDE

Cables listed in the manual are usually shown as Japanese Industrial Standard (JIS). Use the following guide to locate an equivalent cable locally.

JIS cable names may have up to 6 alphabetical characters, followed by a dash and a numerical value (example: DPYC-2.5).
For core types D and T, the numerical designation indicates the *cross-sectional Area (mm^2)* of the core wire(s) in the cable.
For core types M and TT, the numerical designation indicates the *number of core wires* in the cable.

1. Core Type
D: Double core power line
T: Triple core power line
M: Multi core
TT: Twisted pair communications (1Q=quad cable)

2. Insulation Type
P: Ethylene Propylene Rubber

3. Sheath Type
Y: PVC (Vinyl)

4. Armor Type
C: Steel

5. Sheath Type
Y: Anticorrosive vinyl sheath

6. Shielding Type
SLA: All cores in one shield, plastic tape w/aluminum tape
-SLA: Individually shielded cores, plastic tape w/aluminum tape

DPYCY

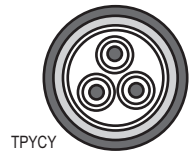
TPYCY

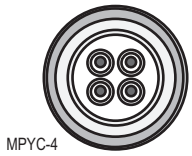
MPYC-4

TTYCSLA-4

EX: TTYCYSLA - 4
(1 2 3 4 5 6; Designation type: TTYCYSLA; # of twisted pairs: 4)

MPYC - 4
(1 2 3 4; Designation type: MPYC; # of cores: 4)

The following reference table lists gives the measurements of JIS cables commonly used with Furuno products:

Type	Core Area	Core Diameter	Cable Diameter	Type	Core Area	Core Diameter	Cable Diameter
DPYC-1.5	1.5mm²	1.56mm	11.7mm	TTYCSLA-1	0.75mm²	1.11mm	9.4mm
DPYC-2.5	2.5mm²	2.01mm	12.8mm	TTYCSLA-1T	0.75mm²	1.11mm	10.1mm
DPYC-4	4.0mm²	2.55mm	13.9mm	TTYCSLA-1Q	0.75mm²	1.11mm	10.8mm
DPYC-6	6.0mm²	3.12mm	15.2mm	TTYCSLA-4	0.75mm²	1.11mm	15.7mm
DPYC-10	10.0mm²	4.05mm	17.1mm	TTYCY-1	0.75mm²	1.11mm	11.0mm
DPYCY-1.5	1.5mm²	1.56mm	13.7mm	TTYCY-1T	0.75mm²	1.11mm	11.7mm
DPYCY-2.5	2.5mm²	2.01mm	14.8mm	TTYCY-1Q	0.75mm²	1.11mm	12.6mm
DPYCY-4	4.0mm²	2.55mm	15.9mm	TTYCY-4	0.75mm²	1.11mm	17.7mm
MPYC-2	1.0mm²	1.29mm	10.0mm	TTYCY-4SLA	0.75mm²	1.11mm	19.5mm
MPYC-4	1.0mm²	1.29mm	11.2mm	TTYCYSLA-1	0.75mm²	1.11mm	11.2mm
MPYC-7	1.0mm²	1.29mm	13.2mm	TTYCYSLA-4	0.75mm²	1.11mm	17.9mm
MPYC-12	1.0mm²	1.29mm	16.8mm				
TPYC-1.5	1.5mm²	1.56mm	12.5mm				
TPYC-2.5	2.5mm²	2.01mm	13.5mm				
TPYC-4	4.0mm²	2.55mm	14.7mm				
TPYCY-1.5	1.5mm²	1.56mm	14.5mm				
TPYCY-2.5	2.5mm²	2.01mm	15.5mm				
TPYCY-4	4.0mm²	2.55mm	16.9mm				

APPENDIX 2 DIGITAL INTERFACE

Digital Interface

- **Input sentence**
  ABK, ACK, ACN, ALR, BWC, BWR, CUR, DBK*1, DBS*1, DBT, DDC, DPT, DTM, GGA, GLL, GNS, HBT, HDG*2, HDM*2, HDT*1, MTW, MWV, OSD, RAQ, RMB, RMC, ROT, RTE, THS, TLL*3, TTM*2, VBW, VDM, VDO, VDR, VHW, VSD, VTG, VWR*1, VWT*1, WPL, ZDA
- **Output sentences**
  ABM, ACK, AIQ, ALC, ALF, ALR, ARC, BBM, DDC, EVE, HBT, OSD, RSD, TLB, TLL*3, TTD, TTM, VSD

*1: For retrofit.

*2: For C-type radars.

*3: NOT for IMO/A-type radars installed with software version “01.**”.

Data reception

Data is received in serial asynchronous form in accordance with the standard referenced in IEC 61162-2 or IEC 61162-1 Ed.5.

The following parameters are used:
Baud rate: 38,400 bps (HDT, THS, !AIVDM, !AIVDO, !AIABK, $AIALR). The baud rate of all other sentences is 4800 bps
Data bits: 8 (D7 = 0), Parity: none, Stop bits: 1

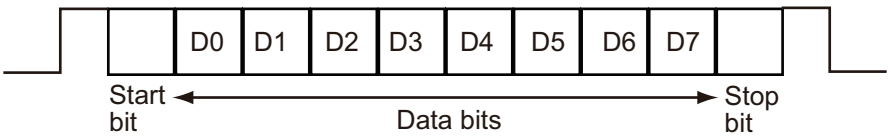

Data Sentences

Input sentences

ABK - AIS addressed and binary broadcast acknowledgement

```
$**ABK,xxxxxxxxx,x,x.x,x,x,*hh<CR><LF>
                1      2  3  4 5
```

1. MMSI of the addressed AIS unit (No use)
2. AIS channel of reception (No use)
3. Message ID (No use)
4. Message sequence number (No use)
5. Type of acknowledgement (See below.)
   0 = Message (6 or 12) sucessfully received by the addressed AIS unit
   1 = Message (6 or 12) was broadcast, but no acknowledgement by the addressed AIS unit
   2 = Message could not be broadcast (i.e. quantity of encapsulated data exceeds five slots)
   3 = Requested broadcast of message (8, 14, or 15) has been successfully completed.
   4 = Late reception of a message 7 or 13 acknowledgement that was addressed to this AIS unit (own-ship) and referenced a valid transaction.
   5 = Message has been read and acknowledged on a display unit.

ACK - Acknowledge alarm

```
$**ACK,xxx,*hh<CR><LF>
        1
```

1. Unique alarm number (identifier) at alarm source (000 to 999)

ACN - Alert command

```
$**ACN,hhmmss.ss,aaa,x.x,x.x,c,a*hh<CR><LF>
          1        2    3  4  5 6
```

1. Time (No use)
2. Manufacturer mnemonic code (3 digit alphanumeric code, null)
3. Alert identifier (0 to 999999)
4. Alert instance (1 to 999999, null)
5. Alert command (A=Acknowledge, Q=Request /Repeat information, O=Responsibility transfer, S=Silence)
6. Sentence status flag (C)

ALR - Set alarm state

```
$**ALR,hhmmss.ss,xxx,A,A,c—c,*hh<CR><LF>
            1       2 3 4   5
```

1. Time of alarm condition change, UTC (No use)
2. Unique alarm number (identifier) at alarm source (000 to 999, null)
3. Alarm condition (A=threshold exceeded, V=not exceeded)
4. Alarm acknowledge state (A=acknowledged, V=not acknowledged)
5. Alarm description text (alphanumeric)

BWC - Bearing and distance to waypoint – Great circle

```
$ **BWC,hhmmss.ss,llll.ll, a,yyyyy.yy,a,x.x,T,x.x,M,x.x,N,c--c,a*hh<CR><LF>
            1        2   3       4   5  6 7 8  9 10 11 12 13
```

1. UTC of observation (No use)
2. Waypoint latitude (0000.0000 to 9000.0000)
3. N/S
4. Waypoint longitude (00000.0000 to 18000.0000)
5. E/W
6. Bearing, degrees true (No use)
7. Unit, True (No use)
8. Bearing, degrees magnetic (No use)
9. Unit, Magnetic (No use)
10. Distance, nautical miles (No use)
11. Unit, N (No use)
12. Waypoint ID (Max. 15 characters)
13. Mode Indicator (A=Autonomous, D=Differential, null*)
    *: For IMO-type or R-type radar, null is invalid.

BWR - Bearing and distance to waypoint – Rhumb line

```
$ **BWR,hhmmss.ss,llll.ll,a,yyyyy.yy,a.x.x,T,x.x,M,x.x,N,c--c,a,*hh<CR><LF>
                 1          2 3       4    5  6 7  8   9  10 11 12 13
```

1. UTC of observation (No use)
2. Waypoint latitude (0000.0000 to 9000.0000)
3. N/S
4. Waypoint longitude (00000.0000 to 18000.0000)
5. E/W
6. Bearing, degrees true (No use)
7. Unit, True (No use)
8. Bearing, degrees magnetic (No use)
9. Unit, Magnetic (No use)
10. Distance, nautical miles (No use)
11. Unit, N (No use)
12. Waypoint ID (Max. 15 characters)
13. Mode Indicator (A=Autonomous, D=Differential, null*)
    *: For IMO-type or R-type radar, null is invalid.

CUR - Water current layer – Multi-layer water current data

```
$**CUR,A,x,x.x,x.x,x.x,a,x.x,x.x,x.x,a,a,*hh<CR><LF>
          1  2 3   4    5   6  7   8   9  1011
```

1. Validity of data (A=Valid)
2. Data set number (No use)
3. Layer number (1 to 5)
4. Current depth in meters (No use)
5. Current direction in degrees (0.0 to 359.9)
6. Direction reference in use (true or relative)
7. Current speed in knots (0.0 to 99.9)
8. Reference layer depth in meters (No use)
9. Heading (No use)
10. Heading reference in use (No use)
11. Speed reference (No use)

DBK - Depth below keel

```
$**DBK,x.x,f,x.x,M,x.x,F,*hh<CR><LF>
          1  2  3   4   5  6
```

1. Water depth (0.00 to 99999.99)
2. feet
3. Water depth (0.00 to 99999.99)
4. Meters
5. Water depth (0.00 to 99999.99)
6. Fathom

DBS - Depth below surface

```
$**DBS,x.x,f,x.x,M,x.x,F,*hh<CR><LF>
          1  2  3   4   5  6
```

1. Water depth (0.00 to 99999.99)
2. feet
3. Water depth (0.00 to 99999.99)
4. Meters
5. Water depth (0.00 to 99999.99)
6. Fathom

DBT - Depth below transducer

```
$**DBT,x.x,f,x.x,M,x.x,F,*hh<CR><LF>
          1  2  3   4   5  6
```

1. Water depth (0.00 to 99999.99)
2. feet
3. Water depth (0.00 to 99999.99)
4. Meters
5. Water depth (0.00 to 99999.99)
6. Fathoms

DDC - Display dimming control

```
$**DDC,a,xx,a,a*hh<CR><LF>
         1 2  3 4
```

1. Display dimming preset (D=Daytime, K=Dusk, N=Nightime, null)
2. Brightness percentage (00 to 99, null)
3. Color palette (No use)
4. Sentences status flag (C)

DPT - Depth

```
$**DPT,x.x,x.x,x.x,*hh<CR><LF>
         1    2   3
```

1. Water depth relative to the transducer, meters (0.00 to 99999.99)
2. Offset from transducer, meters (-99.99 to 99.99)
3. Minimum range scale in use (No use)

DTM - Datum reference

```
$**DTM,ccc,a,x.x,a,x.x,a,x.x,ccc,*hh<CR><LF>
          1  2  3   4  5  6  7    8
```

1. Local datum (W84=WGS84, W72=WGS72, S85=SGS85, P90=PE90, three characters)
2. Local datum subdivision code (No use)
3. Lat offset, min (No use)
4. N/S (No use)
5. Lon offset, min (No use)
6. E/W (No use)
7. Altitude offset, meters (No use)
8. Reference datum (No use)

GGA - Global positioning system fix data

```
$**GGA,hhmmss.ss,llll.lll,a,yyyyy.yyy,a,x,xx,x.x,x.x,M,x.x,M,x.x,xxxx,*hh<CR><LF>
                1         2   3       4       5 6 7   8    9  10 11 12 13  14
```

1. UTC of position (No use)
2. Latitude (0000.0000 to 9000.0000)
3. N/S
4. Longitude (00000.0000 to 18000.0000)
5. E/W
6. GPS quality indicator (1 to 8)
7. Number of satllite in use (No use)
8. Horizontal dilution of precision (0.00 to 999.99)
9. Antenna altitude above/below mean sealevel (No use)
10. Unit, m (No use)
11. Geoidal separation (No use)
12. Unit, m (No use)
13. Age of differential GPS data (0 to 999, null)
14. Differential reference station ID (No use)

GLL - Geographic position, latitude/longitude

```
$**GLL,llll.ll,a,yyyyy.yy,a,hhmmss.ss,A,a,*hh<CR><LF>
          1   2       3     4       5         6  7
```

1. Latitude (0000.0000 to 9000.0000)
2. N/S
3. Longitude (00000.0000 to 18000.0000)
4. E/W
5. UTC of position (No use)
6. Status (A=data valid, V=data not valid)
7. Mode indicator (A=Autonomous, D=Differential, E=Estimated, M=Manual input, S=Simulator)

GLL - Future position

```
$**GLL,llll.ll,a,yyyyy.yy,a,hhmmss.ss,A,x.x,*hh<CR><LF>
          1   2       3     4       5         6   7
```

1. Future Latitude (0000.0000 to 9000.0000)
2. N/S
3. Future Longitude (00000.0000 to 18000.0000)
4. E/W
5. UTC of Future position (No use)
6. Display Status (A=Display, V=Hide)
7. Future Heading (0.0 to 360.0)

GNS - GNSS fix data

```
$**GNS,hhmmss.ss,llll.ll,a,yyyyy.yy,a,c--c,xx,x.x,x.x,x.x,x.x,x.x,a*hh<CR><LF>
                1          2   3      4      5   6    7   8   9   10  11 12 13
```

1. UTC of position (No use)
2. Latitude (0000.0000 to 9000.0000)
3. N/S
4. Longitude (00000.0000 to 18000.0000)
5. E/W
6. Mode indicator (A, D, E, F, M, N, P, R, S)
   A=Autonomous, D=Differential, E=Estimated Mode, F=Float RTK, M=Manual Input Mode, N=No fix, P=Precise, R=Real Time Kinematic, S=Simulator Mode
7. Total number of satellites in use (No use)
8. HDOP (0.00 - 999.99)
9. Antenna altitude, meters (No use)
10. Geoidal separation, meters (No use)
11. Age of differential data (0 to 999, null)
12. Differential reference station ID (No use)
13. Naivgational status indicator (S=Safe, C=Caution, U=Unsafe, V=Not valid, null)

HBT - Heartbeat supervision sentence

```
$**HBT,x.x,A,x*hh<CR><LF>
         1  2  3
```

1. Configured repeat interval (1 to 999(s))
2. Equipment status (No use)
3. Sequential sequence identifier (0 to 9)

HDG - Heading, Deviation and Variation

```
$**HDG,x.x,x.x,a,x.x,a*hh<CR><LF>
          1    2  3   4  5
```

1. Magnetic sensor heading, degrees (0.0 to 359.9)
2. Magnetic deviation, degrees (0.00 to 180.00)
3. E/W
4. Magnetic variation, degrees (0.00 to 180.00)
5. E/W

HDM - Heading, Magnetic

```
$**HDM,x.x,M*hh<CR><LF>
        1  2
```

1. Heading, degrees (0.0 to 359.9)
2. Magnetic (M)

HDT - Heading, true

```
$**HDT,x.x,T*hh<CR><LF>
        1   2
```

1. Heading, degrees (0.0 to 359.9)
2. True (T)

MTW - Water temperature

```
$**MTW,x.x,C<CR><LF>
        1   2
```

1. Water temperature (-9.99 to 99.99)
2. Degrees C

MWV - Wind speed and angle

```
$**MWV,x.x,a,x.x,a,A*hh<CR><LF>
        1  2  3   4 5
```

1. Wind angle, degrees (0.0 to 359.9)
2. Reference (R/T)
3. Wind speed (0.0 to 999.9)
4. Wind speed units (K=km/h, M=m/s, N=knots, S=SM/h)
5. Status (A)

OSD - Own ship data

```
$**OSD,x.x,A,x.x,a,x.x,a,x.x,x.x,a*hh<CR><LF>
        1  2   3  4   5  6  7    8  9
```

1. Heading, degrees true (No use)
2. Heading status (No use)
3. Vessel course, degrees true (0.0 to 359.9)
4. Course reference (B=Bottom tracking log, M=Manually entered, W=Water referenced, P=Positioning system ground reference)
5. Vessel speed (0.0 to 999.9)
6. Speed reference (B=Bottom tracking log, W=Water referenced, P=Positioning system ground reference)
7. Vessel set, degrees true, manually entered (No use)
8. Vessel drift (speed), manually entered (No use)
9. Speed units (K=km/h, N=knots, S=statute mile/h)

RAQ - Query sentence

```
$**RAQ,ccc*hh<CR><LF>
        1
```

1. Request sentence (DDC)

RMB - Recommended minimum navigation information.

```
$**RMB,A,x.x,a,CCCC,CCCC,llll.ll,a,yyyyy.yy,a,x.x,x.x,x.x,A,a*hh <CR><LF>
          1  2 3    4        5      6  7      8     9 10  11  121314
```

1. Data status (A=Data valid)
2. Cross track error (NM) (No use)
3. Direction to steer (No use)
4. Origin waypoint ID (No use)
5. Destination waypoint ID (Max. 15 characters)
6. Destination waypoint latitude (0000.0000 to 9000.0000)
7. N/S
8. Destination waypoint longitude (00000.0000 to 18000.0000)
9. E/W
10. Range to destination, nautical miles (No use)
11. Bearing to destination, degrees true (No use)
12. Destination closing velocity, knots (No use)
13. Arrival status (No use)
14. Mode indicator (A= Autonomous, D= Differential mode, E=Estimated (dead reckoning mode), M=Manual input mode, S= Simulator)

RMC - Recommended minimum specific GNSS data

```
$**RMC,hhmmss.ss,A,llll.ll,a,yyyyy.yy,a,x.x,x.x,xxxxxx,x.x,a,a,a*hh<CR><LF>
                        1      2  3  4     5      6  7  8      9     10111213
```

1. UTC of position fix (No use)
2. Status (A=data valid)
3. Latitude (0000.0000 to 9000.0000)
4. N/S
5. Longitude (00000.0000 to 18000.0000)
6. E/W
7. Speed over ground, knots (0.0 to 999.9)
8. Course over ground, degrees true (0.0 to 359.9)
9. Date (No use)
10. Magnetic variation, degrees E/W (No use)
11. E/W (No use)
12. Mode indicator (A= Autonomous mode, D= Differential mode, E=Estimated (DR), F=Float RTK, M=Manual, P=Precise, R=Real time kinematic, S= Simulator)
13. Navigational status indication (S=Safe, C=Caution, U=Unsafe, V=Navigational status not valid, null)

ROT- Rate of turn

```
$**ROT,x.x,A*hh<CR><LF>
          1  2
```

1. Rate of turn, deg/min, "-"=bow turns to port (No use)
2. Status (No use)

RTE - Routes

```
$**RTE,x.x,x.x,a,c--c,c--c, • •,c--c*hh <CR><LF>
          1   2 3  4    5   • •  n
```

1. Total number of sentences being transmitted (1 to 50, null)
2. Sentence number (1 to 50, null)
3. Sentence mode (c:complete route, all waypoints, w:working route, first listed waypoint is "FROM", second is "TO" and remaining are rest of route)
4. Route identifier (Max. 15 characters, null)
5. Waypoint “n” identifier (Max. 15 characters, null)

• • Additional waypoint indentifiers

THS - True heading and status

```
$**THS,x.x,a*hh<CR><LF>
          1  2
```

1. Heading, degrees True (0.0 to 359.9)
2. Mode indicator (A=Autonomous, E=Estimated (dead reckoning))

TLL - Target Latitude and Longitude

```
$**TLL,x.x,llll,ll,a,yyyy.yy,a,c--c,hhmmss.ss,a,a*hh<CR><LF>
         1    2  3      4    5  6          7        8 9
```

1. Target number (No use)
2. Target latitude (0000.0000 to 9000.0000)
3. N/S
4. Target longitude (00000.0000 to 18000.0000)
5. E/W
6. Target name (No use)
7. UTC of data (No use)
8. Target status (No use)
9. Reference target (No use)

TTM - Tracked Target Message

```
$**TTM,xx,x.x,x.x,a,x.x,x.x,a,x.x,x.x,a,c--c,a,a,hhmmss.ss,a*hh<CR><LF>
         1   2    3  4  5    6  7   8   9 10 11  1213        14       15
```

1. Target number (00 to 99)
2. Target distance from own ship (0.000 to 99.999)
3. Bearing from own ship,degrees true/relative (0.0 to 359.9)
4. True or Relative (T, R)
5. Target speed (0.00 to 102.00, null)
6. Target course, degrees true/relative (0.0 to 359.9, null)
7. T=True or R=Relative
8. Distance of closest point of approach (0.00 to 99.99)
9. Time to CPA, min., "-" increasing (-99.99 to 99.99, null)
10. Speed/distance units (K=km, km/h, N=NM, kn, S= SM, mph)
11. Target name (other than null)
12. Target status (L=Lost, tracked target has been lost , Q=Query, target in the process of acquisition, T=Tracking)
13. Reference target (No use)
14. UTC of data (numeric in six digits, null)
15. Type of acquisition (other than null)

VBW - Dual ground/water speed

```
$**VBW,x.x,x.x,a,x.x,x.x,a,x.x,a,x.x,a,*hh<CR><LF>
          1    2  3   4   5  6  7   8  9 10
```

1. Longitudinal water speed, knots (-999.9 to 999.9)
2. Transverse water speed, knots (-999.9 to 999.9, null)
3. Status: water speed (A=data valid)
4. Longitudinal ground speed, knots (-999.9 to 999.9)
5. Transverse ground speed, knots (-999.9 to 999.9, null is invalid for IMO/R-Type radars)
6. Status: ground speed (A=data valid)
7. Stern transverse water speed, knots (No use)
8. Status: stern water speed (No use)
9. Stern transverse ground speed, knots (No use)
10. Status: stern ground speed (No use)

VDM - AIS VHF data-link message

```
!**VDM,x,x,x,a,s--s,x,*hh<CR><LF>
        1 2 3 4   5  6
```

1. Total number of sentences needed to transfer the message (1 to 9)
2. Sentence number (1 to 9)
3. Sequential message identifier (0 to 9, null)
4. AIS channel Number (A, B, null)
5. Encapsulated ITU-R M.1371 radio message (1 to 63 bytes)
6. Number of fill-bits (0 to 5)

VDO - AIS VHF data-link own-vessel report

```
!**VDO,x,x,x,a,s--s,x,*hh<CR><LF>
        1 2 3 4   5  6
```

1. Total number of sentences needed to transfer the message (1 to 9)
2. Sentence number (1 to 9)
3. Sequential message identifier (0 to 9, null)
4. AIS channel Number (A, B, C, D, null)
5. Encapsulated ITU-R M.1371 radio message (1 to 63 bytes)
6. Number of fill-bits (0 to 5)

VDR - Set and drift

```
$**VDR,x.x,T,x.x,M,x.x,N,*hh <CR><LF>
         1  2 3  4  5 6
```

1. Direction, degrees (0.0 to 359.9, null)
2. T=True (fixed)
3. Direction, degrees (No use)
4. M=Magnetic (No use)
5. Current speed (0.0 to 99.9)
6. N=Knots (fixed)

VHW - Water speed and heading

```
$**VHW,x.x,T,x.x,M,x.x,N,x.x,K,*hh <CR><LF>
         1  2  3 4  5  6 7  8
```

1. Heading, degrees (0.0 to 359.9)
2. T=True (fixed, No use)
3. Heading, degrees (No use)
4. M=Magnetic (fixed, No use)
5. Speed, knots (-999.9 to 999.9)
6. N=Knots (fixed)
7. Speed, km/hr (-999.9 to 999.9)
8. K=km/hr (fixed)

VSD - AIS voyage static data

```
$**VSD,x.x,x.x,x.x,c--c,hhmmss.ss,xx,xx,x.x,x.x*hh<CR><LF>
         1   2   3   4         5       6  7  8   9
```

1. Type of ship and cargo category (No use)
2. Maximum present static draught (No use)
3. Persons on-board (0 to 8191)
4. Destination (No use)
5. Estimated UTC of arrival at destination (No use)
6. Estimated day of arrival at destination (No use)
7. Estimated month of arrival at destination (No use)
8. Navigational status (No use)
9. Regional application flags (No use)

VTG - Course over ground and ground speed

```
$**VTG,x.x,T,x.x,M,x.x,N,x.x,K,a,*hh <CR><LF>
          1  2  3  4  5  6  7  8  9
```

1. Course over ground, degrees (0.0 to 359.9)
2. T=True (fixed)
3. Course over ground, degrees (No use)
4. M=Magnetic (No Use)
5. Speed over ground, knots (0.0 to 999.9)
6. N=Knots (fixed)
7. Speed over ground (0.0 to 999.9)
8. K=km/h (fixed)
9. Mode indicator (A=Autonomous, D=Differential, E=Estimated (dead reckoning), M=Manual input, P=Precision, S=Simulator)

VWR - Wind relative Bearing and Velocity

```
$**VWR,x.x,a,x.x,N,x.x,M,x.x,K<CR><LF>
          1  2 3 4  5  6  7 8
```

1. Measured wind angle relative to the vessel, degrees (0.0 to 180.0)
2. L=Left semicircle, R=Right semicircle
3. Velocity, knots (0.0 to 999.9)
4. Unit (N, fixed)
5. Velocity (0.0 to 999.9)
6. Unit (M, fixed)
7. Velocity, km/h (0.0 to 999.9)
8. Unit (K, fixed)

VWT - True wind speed and angle

```
$**VWT,xxx,a,xx.x,N,xx.x,M,xxx.x,K<CR><LF>
          1  2   3  4   5  6    7   8
```

1. Calculated wind angle, degrees (0.0 to 180.0)
2. L=Left semicircle, R=Right semicircle
3. Calculated with speed, knots (0.0 to 999.9)
4. Unit (N, fixed)
5. Wind speed (0.0 to 999.9)
6. Unit (M, fixed)
7. Wind speed, km/h (0.0 to 999.9)
8. Unit (K, fixed)

WPL - Waypoint location

```
$**WPL,llll.ll,a,yyyyy.yy,a,c--c*hh<CR><LF>
          1  2      3     4   5
```

1. Waypoint latitude (0000.0000 to 9000.0000)
2. N/S
3. Waypoint longitude (00000.0000 to 18000.0000)
4. E/W
5. Waypoint identifier (Max. 15 characters)

ZDA - Time and date

```
$**ZDA,hhmmss.ss,xx,xx,xxxx,xx,xx,*hh<CR><LF>
                1      2  3   4    5 6
```

1. UTC (000000.00 to 235959.99, 235960.00 to 235960.99, 240000.00 to 240000.99, 240001.00 to 240001.99)
2. Day (01 to 31)
3. Month (01 to12)
4. Year (UTC) (0000 to 9999)
5. Local zone, hours (No use)
6. Loca zone, minutes (No use)

Output sentences

ABM - AIS addressed binary and safety related message

```
!**ABM,x,x,x,xxxxxxxxx,x,xx,s--s,x,*hh<CR><LF>
        1 2 3     4       5 6   7 8
```

1. Total number of sentences needed to transfer the message (1 to 9)
2. Message sentence number (1 to 9)
3. Message sequence identifier (0 to 3)
4. The MMSI of destination AIS unit for the ITU-R M.1371 message (9 digits, null)
5. AIS channel for broadcast of the radio message (0 to 3, null)
6. VDL message number (6 or 12, null), see ITU-R M.1371
7. Encapsulated data (1 to 63 bytes)
8. Number of fill-bits (0 to 5)

ACK - Acknowledge alarm

```
$**ACK,xxx,*hh<CR><LF>
          1
```

1. Unique alarm number (identifier) at alarm source (000 to 999)

AIQ - Query sentence

```
$**AIQ,ccc,*hh<CR><LF>
         1
```

1. Requested sentence (VSD)

ALC - Cyclic alert list

```
$**ALC,xx,xx,xx,xx,aaa,x.x,x.x,x.x,’’’’’’’’,*hh<CR><LF>
         1  2   3  4   5   6  7   8   9
```

1. Total number of sentences this message (01 to 16)
2. Sentence number (01 to 16)
3. Sequential message identifier (00 to 99)
4. Number of alert entries (0 to 3)
5. Manufacturer mnemonic code (FEC, null)
6. Alert identifier (0 to 999999)
7. Alert instance (1 to 999999, null)
8. Revision counter (1 to 99)
9. Additional alert entries (see Note)

Alert entry 1
See Note

Note: Alert entry 0 - n: Each alert entry consists of
- Manufacturer Identifier (see ALF Manufactuer)
- Alert Identifier (see ALF Alert identifier)
- Alert instance (see ALF instance)
- Revision counter (see ALF revision counter)

Each entry identifies a certain alert with a certain state.
It is not allowed that an alert entry is split between two ALC sentences.

ALF - Alert sentence

```
$**ALF,x,x,x,hhmmss.ss,a,a,a,aaa,x.x,x.x,x.x,x,c--c,*hh<CR><LF>
        1 2 3       4       5 6 7   8    9  10  11 12 13
```

1. Total number of ALF sentences this message (1, 2)
2. Sentence number (1, 2)
3. Sequential message identifier (0 to 9)
4. Time of last change (000000.00 to 235959.99, 235960.00 to 235960.99, 240000.00 to 240000.99, 240001.00 to 240001.99, null)
5. Alert category (A=Alert category A, B=Alert category B, null)
6. Alert priority (A=Alarm, W=Warning, C=Caution, null)
7. Alert state (A=active-acknowledged or active, S=active-silenced, O=active-responsibility transferred, U=rectified-unacknowledged, V=active-unacknowledged, N=normal, null)
8. Manufacturer mnemonic code (FEC, null)
9. Alert identifier (0 to 999999)
10. Alert instance (1 to 999999, null)
11. Revision counter (1 to 99)
12. Escalation counter (0 to 9)
13. Alert text (max. 16 characters)

ALR - Set alarm state

```
$**ALR,hhmmss.ss,xxx,A,A,c—c,*hh<CR><LF>
                1       2   3 4    5
```

1. Time of alarm condition change, UTC (000000.00 to 235959.99, 235960.00 to 235960.99, 240000.00 to 240000.99, 240001.00 to 240001.99, null)
2. Unique alarm number (identifier) at alarm source (000 to 999, null)
3. Alarm condition (A=threshold exceeded, V=not exceeded)
4. Alarm acknowledge state (A=acknowledged, V=not acknowledged)
5. Alarm description text (alphanumeric)

ARC - Alert command refused

```
$**ARC,hhmmss.ss,aaa,x.x,x.x,c*hh<CR><LF>
            1          2     3   4   5
```

1. Release time of the alert command refused (000000.00 to 235959.99, 235960.00 to 235960.99, 240000.00 to 240000.99, 240001.00 to 240001.99, null)
2. Used for proprietary alerts, defined by the manufacturer (FEC, null)
3. The alert identifier (0 to 999999)
4. The alert instance (1 to 999999, null)
5. Refused alert command (A=acknowledge, O=responsibility transfer)

BBM - AIS broadcast binary message

```
$**BBM,x,x,x,x,xx,s--s,x,*hh<CR><LF>
          12 3 4 5    6   7
```

1. Total number of sentences needed to transfer the message (1 to 9)
2. Sentence number (1 to 9)
3. Sequential message identifier (0 to 9)
4. AIS channel for broadcast of the radio message (0 to 3, null)
5. VDL message number, see ITU-R M.1371 (8 or 14, null)
6. Encapsulated data (1 to 63 bytes)
7. Number of fill-bits (0 to 5)

DDC - Display dimming control

```
$**DDC,a,xx,a,a*hh<CR><LF>
          1 2  3 4
```

1. Display dimming preset (D=Daytime, K=Dusk, N=Nightime)
2. Brightness percentage (00 to 99)
3. Color palette preset (null)
4. Sentences status flag (R)

EVE - General event message

$ **EVE,hhmmss.ss,c--c,c--c*hh<CR><LF>
1 2 3

1. Event time (000000.00 to 235959.99, 235960.00 to 235960.99, 240000.00 to 240000.99, 240001.00 to 240001.99, null)
2. Tag code used for identification of source of event (six alphanumeric characters, two English characters, four digits)
3. Event description (OPERATION)

HBT - Heartbeat supervision sentence

$**HBT,x.x,A,x*hh<CR><LF>
1 2 3

1. Configured repeat interval (60.0(s))
2. Equipment status (A=Normal)
3. Sequential sequence identifier (0 to 9)

OSD- Own ship data

$**OSD,x.x,A,x.x,a,x.x,a,x.x,x.x,a*hh<CR><LF>
1 2 3 4 5 6 7 8 9

1. Heading, degrees true (0.0 to 359.9, null)
2. Heading status (A:data valid, V:data invalid)
3. Vessel course, degrees true (0.0 to 359.9, null)
4. Course reference (B=Bottom tracking log, M=Manually entered, W=Water referenced, R=Radar tracking (of fixed target), P=Positioning system ground reference, null)
5. Vessel speed (0.0 to 99.9, null)
6. Speed reference (B=Bottom tracking log, M=Manually entered, W=Water referenced, R=Radar tracking (of fixed target), P=Positioning system ground reference, null)
7. Vessel set, degrees true, manually entered (0.0 to 359.9, null)
8. Vessel drift (speed), manually entered (0.0 to 19.9, null)
9. Speed units (K=km/h, N=knots, S=statute mile/h, null)

RSD - Radar system data

$**RSD,x.x,x.x,x.x,x.x,x.x,x.x,x.x,x.x,x.x,x.x,x.x,a,a*hh <CR><LF>
1 2 3 4 5 6 7 8 9 10 11 1213

1. Origin 1 range, from own ship (0.000 to 9.999, 10.00 to 99.99, 100.0 to 999.9, 1000 to 9999, null) (see note)
2. Origin 1 bearing, degrees from 0 (0.0 to 359.9, null) (see note)
3. Variable range marker 1(VRM1), range (0.000 to 9.999, 10.00 to 99.99, 100.0 to 999.9, null)
4. Bearing line 1(EBL1), degrees from 0 (0.0 to 359.9, null)
5. Origin 2 range (0.000 to 9.999, 10.00 to 99.99, 100.0 to 999.9, 1000 to 9999, null) (see note)
6. Origin 2 bearing (0.0 to 359.9, null) (see note)
7. VRM2,.9 range (0.000 to 9.999, 10.00 to 99.99, 100.0 to 999.9, null)
8. EBL2, degrees (0.0 to 359.9, null)
9. Cursor range, from own ship (0.000 to 9.999, 10.00 to 99.99, 100.0 to 999.9, null)
10. Cursor bearing, degrees clockwise from 0 (0.0 to 359.9, null)
11. Range scale in use (0.125 to 120.0)
12. Range units (K=km, N=NM, S=statute miles, null)
13. Display rotation (C, H, N, null)
    C=Course-up, course-over-ground up, degrees true
    H=Head-up, ship's heading(center-line) 0 up
    N=North-up, true north is 0 up

NOTE: Origin 1 and origin 2 are located at the stated range and bearing from own ship and provide for two independent sets of variable range markers (VRM) and electronic bearing lines (EBL) originating away from own ship position.

TLB - Target label

$**TLB,x.x,c--c,x.x,c--c,…,x.x,c--c*hh<CR><LF>
1 2 3 3

1. Target number “n” reported by the device (1 to 1023)
2. Label assigned to target “n” (TT=000 to 999, AIS= 000000001 to 999999999)
3. Additional label pairs

TLL - Target latitude and longitude

$**TLL,xx,llll.ll,a,yyyyy.yy,a,c--c,hhmmss.ss,a,a*hh<CR><LF>
1 2 3 4 5 6 7 8 9

1. Target number (null)
2. Target Latitude (0000.0000 to 9000.0000)
3. Target N/S (N/S)
4. Target Longitude (00000.0000 to 18000.0000)
5. Target E/W (E/W)
6. Target name (null)
7. UTC of data (000000.00 to 235959.99, 235960.00 to 235960.99, 240000.00 to 240000.99, 240001.00 to 240001.99, null)
8. Target status (null)
9. Reference target (null)

TTD - Tracked target data

!**TTD,hh,hh,x,s--s,x*hh<CR><LF>
1 2 3 4 5

1. Total hex number of sentences need to transfer the message (h’01)
2. Hex sentence number (h’01)
3. Sequential message identifier (null)
4. Encapsulated trancked target data (6 bit binary-converted data)
5. Number of fill bits (0 to 5)

TTM - Tracked target message

$**TTM,xxx,x.x,x.x,a,x.x,x.x,a,x.x,x.x,a,c--c,a,a,hhmmss.ss,a*hh<CR><LF>
1 2 3 4 5 6 7 8 9 10 11 1213 14 15

1. Target number (000 to 999)
2. Target distance from own ship (0.000 to 99.999)
3. Bearing from own ship,degrees (0.0 to 359.9)
4. True or Relative (T)
5. Target speed (0.00 to 999.99, null)
6. Target course, degrees (0.0 to 359.9, null)
7. T=True or R=Relative
8. Distance of closest point of approach (0.00 to 99.99, null)
9. Time to CPA, min., "-" increasing (-99.99 to 99.99, null)
10. Speed/distance units (N=NM, kn)
11. Target name (null)
12. Target status (L: Lost, tracked target has been lost, Q: Query, target in the process of acquisition, T: Tracking)
13. Reference target (R, null)
14. UTC of data (null)
15. Type of acquisition (A=Automatic, M=Manual)

VSD - AIS voyage static data

```
$**VSD,x.x,x.x,x.x,c--c,hhmmss.ss,xx,xx,x.x,x.x*hh<CR><LF>
          1   2   3   4          5        6  7  8   9
```

1. Type of ship and cargo category (null)
2. Maximum present static draught (0 to 25.5 meters, null)
3. Persons on-board (0 to 8191, null)
4. Destination (1 to 20 characters, null)
5. Estimated UTC of arrival at destination (000000.00 to 235959.99, 246000.00, null)
6. Estimated day of arrival at destination (UTC) (00 to 31, null)
7. Estimated month of arrival at destination (UTC) (00 to 12, null)
8. Navigational status (0 to 15, null)
9. Regional application flags (null)

PACKING LIST

03HL-X-9851 -1 1/1

XN12CF/-HK

A-1

NAME	OUTLINE	DESCRIPTION/CODE No.	Q'TY
ユニット UNIT			
ｱﾝﾃﾅ ANTENNA RADIATOR ASSEMBLY	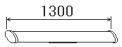	XN12CF* 001-252-640-00 **	1
工事材料 INSTALLATION MATERIALS			
工事材料 INSTALLATION MATERIALS		CP03-35201 001-249-860-00	1

ｺｰﾄﾞ番号末尾の[**]は、選択品の代表ｺｰﾄﾞを表します。
CODE NUMBER ENDING WITH "**" INDICATES THE CODE NUMBER OF REPRESENTATIVE MATERIAL.

(略図の寸法は、参考値です。 DIMENSIONS IN DRAWING FOR REFERENCE ONLY.)

C3616-Z01-B

PACKING LIST

03HL-X-9852 -0 1/1

XN20CF/-HK

A-2

NAME	OUTLINE	DESCRIPTION/CODE No.	Q'TY
ユニット UNIT			
ｱﾝﾃﾅ ANTENNA RADIATOR ASSEMBLY	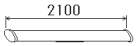	XN20CF 001-252-650-00 **	1
工事材料 INSTALLATION MATERIALS			
工事材料 INSTALLATION MATERIALS		CP03-35201 001-249-860-00	1

ｺｰﾄﾞ番号末尾の[**]は、選択品の代表ｺｰﾄﾞを表します。
CODE NUMBER ENDING WITH "**" INDICATES THE CODE NUMBER OF REPRESENTATIVE MATERIAL.

型式/ｺｰﾄﾞ番号が2段の場合、下段より上段に代わる過渡期品であり、どちらかが入っています。 なお、品質は変わりません。

TWO TYPES AND CODES MAY BE LISTED FOR AN ITEM. THE LOWER PRODUCT MAY BE SHIPPED IN PLACE OF THE UPPER PRODUCT. QUALITY IS THE SAME.

(略図の寸法は、参考値です。 DIMENSIONS IN DRAWING FOR REFERENCE ONLY.)

C3616-Z02-A

PACKING LIST

03HL-X-9853 -0 1/1

XN24CF/-HK

A-3

NAME	OUTLINE	DESCRIPTION/CODE No.	Q'TY
ユニット UNIT			
ｱﾝﾃﾅ ANTENNA RADIATOR ASSEMBLY	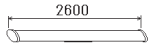	XN24CF 001-252-660-00 **	1
工事材料 INSTALLATION MATERIALS			
工事材料 INSTALLATION MATERIALS		CP03-35201 001-249-860-00	1

ｺｰﾄﾞ番号末尾の[**]は、選択品の代表ｺｰﾄﾞを表します。
CODE NUMBER ENDING WITH "**" INDICATES THE CODE NUMBER OF REPRESENTATIVE MATERIAL.

型式/ｺｰﾄﾞ番号が2段の場合、下段より上段に代わる過渡期品であり、どちらかが入っています。 なお、品質は変わりません。

TWO TYPES AND CODES MAY BE LISTED FOR AN ITEM. THE LOWER PRODUCT MAY BE SHIPPED IN PLACE OF THE UPPER PRODUCT. QUALITY IS THE SAME.

（略図の寸法は、参考値です。 DIMENSIONS IN DRAWING FOR REFERENCE ONLY.）

C3616-Z03-A

PACKING LIST

03FS-X-9856 -0 1/1

XN24AF

A-4

NAME	OUTLINE	DESCRIPTION/CODE No.	Q'TY
ユニット UNIT			
ｱﾝﾃﾅ ANTENNA	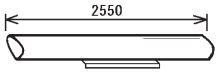	XN24AF 008-487-120	1
ｱﾝﾃﾅ工材 ANTENNA INSTALLATION MATERIALS			
工事材料 INSTALLATION MATERIALS		CP03-19101 008-487-130	1

（略図の寸法は、参考値です。 DIMENSIONS IN DRAWING FOR REFERENCE ONLY.）

C3464-Z05-A

PACKING LIST

03ID-X-9856 -0 1/1

XN30AF

A-5

NAME	OUTLINE	DESCRIPTION/CODE No.	Q'TY
ユニット UNIT			
ｱﾝﾃﾅ ANTENNA RADIATOR ASSEMBLY	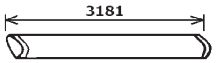	XN30AF 001-546-900-00	1
工事材料 INSTALLATION MATERIALS			
工事材料 INSTALLATION MATERIALS		CP03-19101 008-487-130-00	1

（略図の寸法は、参考値です。 DIMENSIONS IN DRAWING FOR REFERENCE ONLY.）

C3672-Z06-A

PACKING LIST

03IC-X-9864 -0 1/1

SN24CF

A-6

NAME	OUTLINE	DESCRIPTION/CODE No.	Q'TY
ユニット UNIT			
ｱﾝﾃﾅ ANTENNA RADIATOR ASSEMBLY	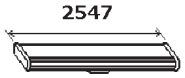	SN24CF 001-505-800-00	1
工事材料 INSTALLATION MATERIALS			
工事材料 INSTALLATION MATERIALS		CP03-35202 001-249-880-00	1

（略図の寸法は、参考値です。 DIMENSIONS IN DRAWING FOR REFERENCE ONLY.）

C3656-Z03-A

PACKING LIST

03IC-X-9865 -0 1/1

SN30CF

A-7

NAME	OUTLINE	DESCRIPTION/CODE No.	Q'TY
ユニット UNIT			
ｱﾝﾃﾅ ANTENNA RADIATOR ASSEMBLY	3072	SN30CF 001-505-810-00	1
工事材料 INSTALLATION MATERIALS			
工事材料 INSTALLATION MATERIALS		CP03-35202 001-249-880-00	1

（略図の寸法は、参考値です。 DIMENSIONS IN DRAWING FOR REFERENCE ONLY.）

C3656-Z04-A

PACKING LIST

03HL-X-9854 -0 1/1

SN36CF/-HK

A-8

NAME	OUTLINE	DESCRIPTION/CODE No.	Q'TY
ユニット UNIT			
ｱﾝﾃﾅ ANTENNA RADIATOR ASSEMBLY	3795	SN36CF 001-252-670-00 **	1
工事材料 INSTALLATION MATERIALS			
工事材料 INSTALLATION MATERIALS		CP03-35202 001-249-880-00	1

ｺｰﾄﾞ番号末尾の[**]は、選択品の代表ｺｰﾄﾞを表します。
CODE NUMBER ENDING WITH "**" INDICATES THE CODE NUMBER OF REPRESENTATIVE MATERIAL.

型式/ｺｰﾄﾞ番号が2段の場合、下段より上段に代わる過渡期品であり、どちらかが入っています。 なお、品質は変わりません。

TWO TYPES AND CODES MAY BE LISTED FOR AN ITEM. THE LOWER PRODUCT MAY BE SHIPPED IN PLACE OF THE UPPER PRODUCT. QUALITY IS THE SAME.

（略図の寸法は、参考値です。 DIMENSIONS IN DRAWING FOR REFERENCE ONLY.）

C3618-Z01-A

PACKING LIST

03HL-X-9867 -5 1/1

RSB-128-105N*/-105N*HK ,RSB-128-106N*/-106N*HK/-106N*MSA, RSB-128-123N*/-123N*HK

A-9

NAME	OUTLINE	DESCRIPTION/CODE No.	Q'TY
ユニット UNIT			
空中線本体部 SCANNER UNIT	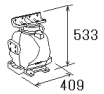	RSB-128*N* 000-024-105-00 **	1
工事材料 INSTALLATION MATERIALS			
工事材料 INSTALLATION MATERIALS		CP03-35401 001-507-920-00	1
図書 DOCUMENT			
吊下締付要領 HOIST X-BAND,TIGHTEN BOLSTS	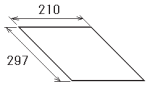	C32-01302-* 000-178-042-1*	1

ｺｰﾄﾞ番号末尾の[**]は、選択品の代表ｺｰﾄﾞを表します。
CODE NUMBER ENDING WITH "**" INDICATES THE CODE NUMBER OF REPRESENTATIVE MATERIAL.

(略図の寸法は、参考値です。 DIMENSIONS IN DRAWING FOR REFERENCE ONLY.)

C3616-Z08-F

PACKING LIST

03HL-X-9855 -6 1/1

RSB-128-105I*, RSB-128-105I*HK, SB-128-106I* ,RSB-128-106I*HK, RSB-128-123I*, RSB-128-123I*HK

A-10

NAME	OUTLINE	DESCRIPTION/CODE No.	Q'TY
ユニット UNIT			
空中線本体部 SCANNER UNIT	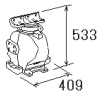	RSB-128*I* 000-024-106-00 **	1
予備品 SPARE PARTS			
予備品 SPARE PARTS		SP03-19701 001-531-630-00	1
工事材料 INSTALLATION MATERIALS			
工事材料 INSTALLATION MATERIALS		CP03-35403 001-507-930-00	1
図書 DOCUMENT			
吊下締付要領 HOIST X-BAND,TIGHTEN BOLSTS	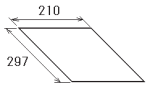	C32-01302-* 000-178-042-1*	1

ｺｰﾄﾞ番号末尾の[**]は、選択品の代表ｺｰﾄﾞを表します。
CODE NUMBER ENDING WITH "**" INDICATES THE CODE NUMBER OF REPRESENTATIVE MATERIAL.

(略図の寸法は、参考値です。 DIMENSIONS IN DRAWING FOR REFERENCE ONLY.)

C3616-Z04-G

PACKING LIST

03HL-X-9856 -3 1/1

RSB-129-107N* ,RSB-129-107NHK,RSB-129-107NMSA,RSB-133-111N* ,RSB-133-111NHK,,RSB-133-111NMSA

A-11

NAME	OUTLINE	DESCRIPTION/CODE No.	Q'TY
ユニット UNIT			
空中線本体部 SCANNER UNIT	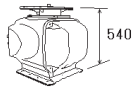	RSB-129/133*N* 000-024-113-00 **	1
工事材料 INSTALLATION MATERIALS			
工事材料 INSTALLATION MATERIALS		CP03-35402 001-255-430-00	1
図書 DOCUMENT			
吊下要領 HOIST S-BAND ANTENNA	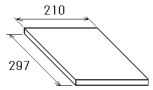	C32-01303-* 000-178-043-1*	1

ｺｰﾄﾞ番号末尾の[**]は、選択品の代表ｺｰﾄﾞを表します。
CODE NUMBER ENDING WITH "**" INDICATES THE CODE NUMBER OF REPRESENTATIVE MATERIAL.

（略図の寸法は、参考値です。 DIMENSIONS IN DRAWING FOR REFERENCE ONLY.）

C3618-Z02-D

PACKING LIST

03HL-X-9866 -2 1/1

RSB-129-107I* ,RSB-129-107IHK ,RSB-133-111I* ,RSB-133-111IHK

A-12

NAME	OUTLINE	DESCRIPTION/CODE No.	Q'TY
ユニット UNIT			
空中線本体 SCANNER UNIT	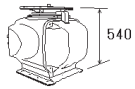	RSB-129/133*I* 000-024-114-00 **	1
予備品 SPARE PARTS			
予備品 SPARE PARTS		SP03-19701 001-531-630-00	1
工事材料 INSTALLATION MATERIALS			
工事材料 INSTALLATION MATERIALS		CP03-35404 001-270-080-00	1
図書 DOCUMENT			
吊下要領 HOIST S-BAND ANTENNA	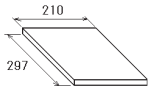	C32-01303-* 000-178-043-1*	1

ｺｰﾄﾞ番号末尾の[**]は、選択品の代表ｺｰﾄﾞを表します。
CODE NUMBER ENDING WITH "**" INDICATES THE CODE NUMBER OF REPRESENTATIVE MATERIAL.

（略図の寸法は、参考値です。 DIMENSIONS IN DRAWING FOR REFERENCE ONLY.）

C3619-Z03-C

PACKING LIST

03HO-X-9851 -2 1/1

RSB-130N

A-13

NAME	OUTLINE	DESCRIPTION/CODE No.	Q'TY
ユニット UNIT			
空中線本体部 SCANNER UNIT	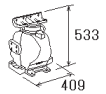	RSB-130N 000-025-517-00	1
工事材料 INSTALLATION MATERIALS			
工事材料 INSTALLATION MATERIALS		CP03-35901 001-507-940-00	1
図書 DOCUMENT			
吊下締付要領 HOIST X-BAND,TIGHTEN BOLSTS	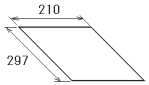	C32-01302-* 000-178-042-1*	1
ﾚｸﾄｶﾞｲﾄﾞ取付(X) RECTGUIDE INSTALLATION(X)	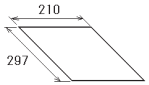	C32-01903-* 000-196-922-1*	1

(略図の寸法は、参考値です。 DIMENSIONS IN DRAWING FOR REFERENCE ONLY.)

C3624-Z01-C

PACKING LIST

03HO-X-9852 -3 1/1

RSB-130I

A-14

NAME	OUTLINE	DESCRIPTION/CODE No.	Q'TY
ユニット UNIT			
空中線本体部 SCANNER UNIT	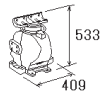	RSB-130I* 000-025-518-00	1
予備品 SPARE PARTS			
予備品 SPARE PARTS		SP03-19701 001-531-630-00	1
工事材料 INSTALLATION MATERIALS			
工事材料 INSTALLATION MATERIALS		CP03-35902 001-507-950-00	1
図書 DOCUMENT			
吊下締付要領 HOIST X-BAND,TIGHTEN BOLSTS	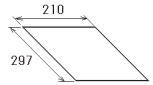	C32-01302-* 000-178-042-1*	1
ﾚｸﾄｶﾞｲﾄﾞ取付(X) RECTGUIDE INSTALLATION(X)	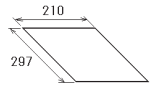	C32-01903-* 000-196-922-1*	1

(略図の寸法は、参考値です。 DIMENSIONS IN DRAWING FOR REFERENCE ONLY.)

C3624-Z02-D

PACKING LIST

03H0-X-9853 -2 1/1

RSB-131N

A-15

NAME	OUTLINE	DESCRIPTION/CODE No.	Q'TY
ユニット UNIT			
空中線本体部 SCANNER UNIT	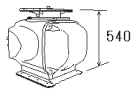	RSB-131N 000-025-523-00	1
工事材料 INSTALLATION MATERIALS			
工事材料 INSTALLATION MATERIALS		CP03-36101 001-301-200-00	1
図書 DOCUMENT			
吊下要領 HOIST S-BAND ANTENNA	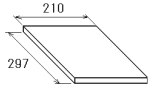	C32-01303-* 000-178-043-1*	1
ﾚｸﾄｶﾞｲﾄﾞ取付(S) RECTGUIDE INSTALLATION(S)	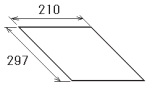	C32-01904-* 000-196-923-1*	1

(略図の寸法は、参考値です。 DIMENSIONS IN DRAWING FOR REFERENCE ONLY.)

C3625-Z01-C

PACKING LIST

03H0-X-9854 -3 1/1

RSB-131I

A-16

NAME	OUTLINE	DESCRIPTION/CODE No.	Q'TY
ユニット UNIT			
空中線本体部 SCANNER UNIT	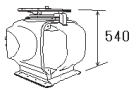	RSB-131I* 000-025-524-00	1
予備品 SPARE PARTS			
予備品 SPARE PARTS		SP03-19701 001-531-630-00	1
工事材料 INSTALLATION MATERIALS			
工事材料 INSTALLATION MATERIALS		CP03-36102 001-301-360-00	1
図書 DOCUMENT			
吊下要領 HOIST S-BAND ANTENNA	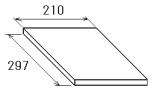	C32-01303-* 000-178-043-1*	1
ﾚｸﾄｶﾞｲﾄﾞ取付(S) RECTGUIDE INSTALLATION(S)	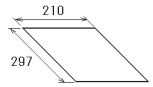	C32-01904-* 000-196-923-1*	1

(略図の寸法は、参考値です。 DIMENSIONS IN DRAWING FOR REFERENCE ONLY.)

C3625-Z02-D

PACKING LIST

03ID-X-9851 -1 1/1

RSB-139-122/-N/-HK

A-17

NAME	OUTLINE	DESCRIPTION/CODE No.	Q'TY
ユニット UNIT			
空中線本体部 SCANNER UNIT	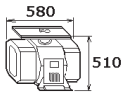	RSB-139-122* 000-036-616-00 **	1
工事材料 INSTALLATION MATERIALS		**CP03-38700**	
工事材料 INSTALLATION MATERIALS		CP03-38701 001-548-440-00	1
工事材料 INSTALLATION MATERIALS		CP03-38702 001-548-450-00	1
工事材料 INSTALLATION MATERIALS		CP03-38703 001-548-460-00	1
図書 DOCUMENT			
ｱﾝﾃﾅ吊下要領 ANTENNA HOIST INSTRUCTIONS	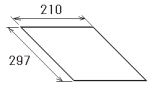	C32-01805-* 000-196-329-1*	1

ｺｰﾄﾞ番号末尾の[**]は、選択品の代表ｺｰﾄﾞを表します。
CODE NUMBER ENDING WITH "**" INDICATES THE CODE NUMBER OF REPRESENTATIVE MATERIAL.

（略図の寸法は、参考値です。 DIMENSIONS IN DRAWING FOR REFERENCE ONLY.）

C3672-Z02-B

PACKING LIST

03ID-X-9852 -0 1/1

PSU-019/-HK

A-18

NAME	OUTLINE	DESCRIPTION/CODE No.	Q'TY
ユニット UNIT			
空中線電源 POWER SUPPLY UNIT	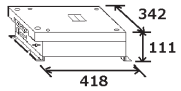	PSU-019* 000-036-602-00 **	1
予備品 SPARE PARTS			
予備品 SPARE PARTS		SP03-15501(AC100) 008-572-730-00	1 (*1)
予備品 SPARE PARTS		SP03-15502(AC220) 008-572-740-00	1 (*1)
工事材料 INSTALLATION MATERIALS			
工事材料 INSTALLATION MATERIALS		CP03-38801 001-547-980-00	1

ｺｰﾄﾞ番号末尾の[**]は、選択品の代表ｺｰﾄﾞを表します。
CODE NUMBER ENDING WITH "**" INDICATES THE CODE NUMBER OF REPRESENTATIVE MATERIAL.
(*1)の予備品は仕様によりAC100用:SP03-15501,AC220用:SP03-15502となります。
(*1) : SELECT ONE ACCORDING TO PROCESSOR UNIT'S SPECIFICATIONS : SP03-15501 FOR 100VAC OR SP03-15502 FOR 220V

（略図の寸法は、参考値です。 DIMENSIONS IN DRAWING FOR REFERENCE ONLY.）

C3672-Z01-A

PACKING LIST

03IC-X-9851 -3 1/1

RPU025-A*2*-N/-A*4*-N/-A*L2*-N/-A*L4*-N/-A*-P/-A*-S, RPU025-B*2*-N/-B*L2*-N/-B*-P/-B*-S/-A*-K A-19

NAME	OUTLINE	DESCRIPTION/CODE No.	Q'TY
ユニット UNIT			
制御部 PROCESSOR UNIT	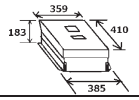	RPU025-* 000-034-271-00 **	1
予備品 SPARE PARTS			
予備品 SPARE PARTS		SP03-17641 001-249-740-00	1
工事材料 INSTALLATION MATERIALS			
工事材料 INSTALLATION MATERIALS		CP03-37801 001-489-150-00	1
図書 DOCUMENT			
取扱説明CD OPERATOR'S MANUAL CD		FAR2XX8 O/M *CDROM* * 000-193-896-1* **	1
操作要領書 OPERATOR'S GUIDE	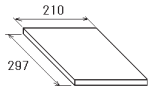	OS*-36520-* 000-193-880-1* **	1
装備要領書 INSTALLATION MANUAL	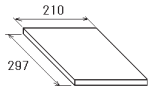	IM*-36520-* 000-193-882-1* **	1

ｺｰﾄﾞ番号末尾の[**]は、選択品の代表型式/ｺｰﾄﾞを表します。
CODE NUMBER ENDING WITH "**" INDICATES THE CODE NUMBER OF REPRESENTATIVE MATERIAL.

（略図の寸法は、参考値です。 DIMENSIONS IN DRAWING FOR REFERENCE ONLY.）

C3652-Z02-D

PACKING LIST

03IC-X-9852 -2 1/1

RPU025-C*4*-N, RPU025-C*L4*-N, RPU025-C*-S, RPU025-D*4*-N, RPU025-D*L4*-N, RPU025-D*-S A-20

NAME	OUTLINE	DESCRIPTION/CODE No.	Q'TY
ユニット UNIT			
制御部 PROCESSOR UNIT	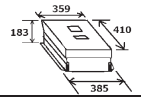	RPU025-* 000-034-278-00 **	1
予備品 SPARE PARTS			
予備品 SPARE PARTS		SP03-17651 001-249-750-00	1
工事材料 INSTALLATION MATERIALS			
工事材料 INSTALLATION MATERIALS		CP03-37801 001-489-150-00	1
図書 DOCUMENT			
取扱説明CD OPERATOR'S MANUAL CD		FAR2XX8 O/M *CDROM* * 000-193-896-1* **	1
操作要領書 OPERATOR'S GUIDE	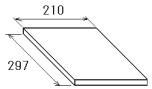	OS*-36520-* 000-193-880-1* **	1
装備要領書 INSTALLATION MANUAL	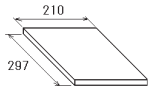	IM*-36520-* 000-193-882-1* **	1

ｺｰﾄﾞ番号末尾の[**]は、選択品の代表型式/ｺｰﾄﾞを表します。
CODE NUMBER ENDING WITH "**" INDICATES THE CODE NUMBER OF REPRESENTATIVE MATERIAL.

（略図の寸法は、参考値です。 DIMENSIONS IN DRAWING FOR REFERENCE ONLY.）

C3656-Z01-C

PACKING LIST

03G0-X-9869 -0 1/1

RCU-014*/-HK

A-21

NAME	OUTLINE	DESCRIPTION/CODE No.	Q'TY
ユニット UNIT			
操作部 CONTROL UNIT	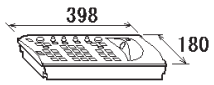	RCU-014*/-HK 000-027-675-00 **	1
付属品 ACCESSORIES			
付属品 ACCESSORIES		FP03-09850 001-418-430-00	1
工事材料 INSTALLATION MATERIALS			
工事材料 INSTALLATION MATERIALS		CP03-25604 001-418-420-00	1

ｺｰﾄﾞ番号末尾の[**]は、選択品の代表ｺｰﾄﾞを表します。
CODE NUMBER ENDING WITH "**" INDICATES THE CODE NUMBER OF REPRESENTATIVE MATERIAL.

型式/ｺｰﾄﾞ番号が2段の場合、下段より上段に代わる過渡期品であり、どちらかが入っています。 なお、品質は変わりません。

TWO TYPES AND CODES MAY BE LISTED FOR AN ITEM. THE LOWER PRODUCT MAY BE SHIPPED IN PLACE OF THE UPPER PRODUCT. QUALITY IS THE SAME.

（略図の寸法は、参考値です。 DIMENSIONS IN DRAWING FOR REFERENCE ONLY.）

CN

C3521-Z29-A

PACKING LIST

03G0-X-9870 -0 1/1

RCU-015*/-HK, RCU-016

A-22

NAME	OUTLINE	DESCRIPTION/CODE No.	Q'TY
ユニット UNIT			
操作部 CONTROL UNIT	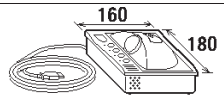	RCU-015*/-HK, RCU-016 000-027-702-00 **	1
付属品 ACCESSORIES			
付属品 ACCESSORIES		FP03-09860 001-419-140-00	1
工事材料 INSTALLATION MATERIALS			
工事材料 INSTALLATION MATERIALS		CP03-25604 001-418-420-00	1

ｺｰﾄﾞ番号末尾の[**]は、選択品の代表ｺｰﾄﾞを表します。
CODE NUMBER ENDING WITH "**" INDICATES THE CODE NUMBER OF REPRESENTATIVE MATERIAL.

型式/ｺｰﾄﾞ番号が2段の場合、下段より上段に代わる過渡期品であり、どちらかが入っています。 なお、品質は変わりません。

TWO TYPES AND CODES MAY BE LISTED FOR AN ITEM. THE LOWER PRODUCT MAY BE SHIPPED IN PLACE OF THE UPPER PRODUCT. QUALITY IS THE SAME.

（略図の寸法は、参考値です。 DIMENSIONS IN DRAWING FOR REFERENCE ONLY.）

CN

C3521-Z30-A

PACKING LIST

03ID-X-9853 -1 1/1

RCU-031-J/-E

A-23

NAME	OUTLINE	DESCRIPTION/CODE No.	Q'TY
ユニット UNIT			
操作部 CONTROL UNIT	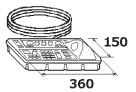	RCU-031-＊ 000-036-588-00 ＊＊	1
工事材料 INSTALLATION MATERIALS			
工事材料 INSTALLATION MATERIALS		CP10-09601 001-537-900-00	1
KB取付金具 KB FIXTURE ASSEMBLY		CP03-33202 001-115-510-00	1

ｺｰﾄﾞ番号末尾の[＊＊]は、選択品の代表ｺｰﾄﾞを表します。
CODE NUMBER ENDING WITH "＊＊" INDICATES THE CODE NUMBER OF REPRESENTATIVE MATERIAL

（略図の寸法は、参考値です。 DIMENSIONS IN DRAWING FOR REFERENCE ONLY.）

C3672-Z03-B

FURUNO

CODE NO.	001-507-920-00	03HL-X-9403 -1
TYPE	CP03-35401	1/1

A-24

工事材料表

INSTALLATION MATERIALS

番号 NO.	名称 NAME	略図 OUTLINE	型名／規格 DESCRIPTIONS		数量 Q'TY	用途／備考 REMARKS
1	ｼｰﾙﾜｯｼｬｰ SEAL WASHER		03-001-3002-0 ROHS	CODE NO. 300-130-020-10	4	
2	絶縁シート1 INSULATION SHEET 1		03-182-3117-2	CODE NO. T00-387-752-10	4	
3	六角ﾅｯﾄ 1ｼｭ HEXAGONAL NUT	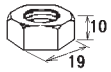	M12 SUS304	CODE NO. 000-167-491-10	8	
4	ﾐｶﾞｷﾏﾙ平座金 FLAT WASHER		M12 SUS304	CODE NO. 000-167-446-10	4	
5	六角ﾎﾞﾙﾄ 全ﾈｼﾞ HEXAGON HEAD SCREW	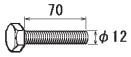	M12X70 SUS304	CODE NO. 000-162-814-10	4	
6	六角ﾅｯﾄ 1ｼｭ HEXAGONAL NUT		M6 SUS304	CODE NO. 000-158-856-10	1	
7	ﾊﾞﾈ座金 SPRING WASHER		M6 SUS304	CODE NO. 000-158-855-10	1	
8	ﾐｶﾞｷ平座金 FLAT WASHER		M6 SUS304	CODE NO. 000-158-854-10	3	
9	六角ﾎﾞﾙﾄ HEXAGONAL HEAD BOLT	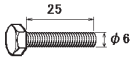	M6X25 SUS304	CODE NO. 000-162-871-10	1	
10	ｹｰﾌﾞﾙ組品 CABLE ASSY.	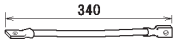	RW-4747	CODE NO. 000-566-000-12	1	

（略図の寸法は、参考値です。 DIMENSIONS IN DRAWING FOR REFERENCE ONLY.）

FURUNO ELECTRIC CO., LTD.

C3616-M02-B

FURUNO

CODE NO.	001-507-930-00	03HL-X-9408 -5
TYPE	CP03-35403	1/2

工事材料表

INSTALLATION MATERIALS

番号 NO.	名称 NAME	略図 OUTLINE	型名／規格 DESCRIPTIONS		数量 Q'TY	用途／備考 REMARKS
1	ｼｰﾙﾜｯｼｬｰ SEAL WASHER		03-001-3002-0 ROHS	CODE NO. 300-130-020-10	4	
2	絶縁シート1 INSULATION SHEET 1		03-182-3117-2	CODE NO. 100-387-752-10	4	
3	圧着端子 CRIMP-ON LUG	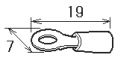	FV2-M4 K	CODE NO. 000-157-229-11	2	
4	ﾛｯｷﾝｸﾞﾜｲﾔｰｻﾄﾞﾙ LOCKING WIRE SADDLE		LWS-1211Z	CODE NO. 000-167-788-11	2	
5	六角ﾅｯﾄ 1ｼｭ HEXAGONAL NUT	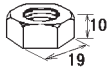	M12 SUS304	CODE NO. 000-167-491-10	8	
6	ﾐｶﾞｷﾏﾙ平座金 FLAT WASHER		M12 SUS304	CODE NO. 000-167-446-10	4	
7	六角ﾎﾞﾙﾄ 全ﾈｼﾞ HEXAGON HEAD SCREW	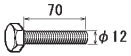	M12X70 SUS304	CODE NO. 000-162-814-10	4	
8	六角ﾅｯﾄ 1ｼｭ HEXAGONAL NUT		M6 SUS304	CODE NO. 000-158-856-10	1	
9	ﾊﾞﾈ座金 SPRING WASHER		M6 SUS304	CODE NO. 000-158-855-10	1	
10	ﾐｶﾞｷ平座金 FLAT WASHER		M6 SUS304	CODE NO. 000-158-854-10	3	

(略図の寸法は、参考値です。 DIMENSIONS IN DRAWING FOR REFERENCE ONLY.)

FURUNO ELECTRIC CO., LTD.

FURUNO

CODE NO.	001-507-930-00	03HL-X-9408 -5
TYPE	CP03-35403	2/2

工事材料表

INSTALLATION MATERIALS

番号 NO.	名称 NAME	略図 OUTLINE	型名／規格 DESCRIPTIONS		数量 Q'TY	用途／備考 REMARKS
11	六角ﾎﾞﾙﾄ HEXAGONAL HEAD BOLT	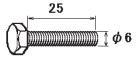	M6X25 SUS304	CODE NO. 000-162-871-10	1	
12	ｹｰﾌﾞﾙ組品 CABLE ASSY.	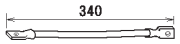	RW-4747	CODE NO. 000-566-000-12	1	
13	ｽﾊﾟｲﾗﾙﾁｭｰﾌﾞ SPIRAL TUBE		SPN-08L *900MM*	CODE NO. 000-179-640-10	1	

(略図の寸法は、参考値です。 DIMENSIONS IN DRAWING FOR REFERENCE ONLY.)

FURUNO

CODE NO.	001-255-430-00	03HL-X-9404 -0
TYPE	CP03-35402	1/1

工事材料表

INSTALLATION MATERIALS

番号 NO.	名称 NAME	略図 OUTLINE	型名／規格 DESCRIPTIONS		数量 Q'TY	用途／備考 REMARKS
1	ｼｰﾙﾜｯｼｬｰ SEAL WASHER	φ30	03-001-3002-0 ROHS	CODE NO. 300-130-020-10	8	
2	六角ﾅｯﾄ 1ｼｭ HEXAGONAL NUT	10 19	M12 SUS304	CODE NO. 000-167-491-10	16	
3	ﾐｶﾞｷﾏﾙ平座金 FLAT WASHER	φ24	M12 SUS304	CODE NO. 000-167-446-10	8	
4	ﾊﾞﾈ座金 SPRING WASHER	22	M12 SUS304	CODE NO. 000-167-397-10	8	
5	六角ﾎﾞﾙﾄ 全ﾈｼﾞ HEXAGON HEAD SCREW	70 φ12	M12X70 SUS304	CODE NO. 000-162-814-10	8	
6	六角ﾅｯﾄ 1ｼｭ HEXAGONAL NUT	5 10	M6 SUS304	CODE NO. 000-158-856-10	1	
7	ﾊﾞﾈ座金 SPRING WASHER	12	M6 SUS304	CODE NO. 000-158-855-10	1	
8	ﾐｶﾞｷ平座金 FLAT WASHER	φ13	M6 SUS304	CODE NO. 000-158-854-10	3	
9	六角ﾎﾞﾙﾄ HEXAGONAL HEAD BOLT	25 φ6	M6X25 SUS304	CODE NO. 000-162-871-10	1	
10	ｹｰﾌﾞﾙ組品 CABLE ASSY.	340	RW-4747	CODE NO. 000-566-000-12	1	

型式/ｺｰﾄﾞ番号が２段の場合、下段より上段に代わる過渡期品であり、どちらかが入っています。　なお、品質は変わりません。

TWO TYPES AND CODES MAY BE LISTED FOR AN ITEM. THE LOWER PRODUCT MAY BE SHIPPED IN PLACE OF THE UPPER PRODUCT.
QUALITY IS THE SAME.

（略図の寸法は、参考値です。　DIMENSIONS IN DRAWING FOR REFERENCE ONLY.）

FURUNO ELECTRIC CO., LTD.

C3618-M03-A

FURUNO

CODE NO.	001-270-080-00	03HL-X-9407 -3
TYPE	CP03-35404	1/2

工事材料表

INSTALLATION MATERIALS

番号 NO.	名称 NAME	略図 OUTLINE	型名／規格 DESCRIPTIONS		数量 Q'TY	用途／備考 REMARKS
1	ｼｰﾙﾜｯｼｬｰ SEAL WASHER	φ30	03-001-3002-0 ROHS	CODE NO. 300-130-020-10	8	
2	圧着端子 CRIMP-ON LUG	19 7	FV2-M4 K	CODE NO. 000-157-229-11	2	
3	ﾛｯｷﾝｸﾞﾜｲﾔｰｻﾄﾞﾙ LOCKING WIRE SADDLE	24 48	LWS-1316Z	CODE NO. 000-169-148-10	1	
4	六角ﾅｯﾄ 1ｼｭ HEXAGONAL NUT	10 19	M12 SUS304	CODE NO. 000-167-491-10	16	
5	ﾐｶﾞｷﾏﾙ平座金 FLAT WASHER	φ24	M12 SUS304	CODE NO. 000-167-446-10	8	
6	ﾊﾞﾈ座金 SPRING WASHER	22	M12 SUS304	CODE NO. 000-167-397-10	8	
7	六角ﾎﾞﾙﾄ 全ﾈｼﾞ HEXAGON HEAD SCREW	70 φ12	M12X70 SUS304	CODE NO. 000-162-814-10	8	
8	六角ﾅｯﾄ 1ｼｭ HEXAGONAL NUT	5 10	M6 SUS304	CODE NO. 000-158-856-10	1	
9	ﾊﾞﾈ座金 SPRING WASHER	12	M6 SUS304	CODE NO. 000-158-855-10	1	
10	ﾐｶﾞｷ平座金 FLAT WASHER	φ13	M6 SUS304	CODE NO. 000-158-854-10	3	

（略図の寸法は、参考値です。　DIMENSIONS IN DRAWING FOR REFERENCE ONLY.）

FURUNO ELECTRIC CO., LTD.

C3618-M06-C(1)

FURUNO

CODE NO.	001-270-080-00	03HL-X-9407 -3
TYPE	CP03-35404	2/2

工事材料表

INSTALLATION MATERIALS

番号 NO.	名称 NAME	略図 OUTLINE	型名／規格 DESCRIPTIONS		数量 Q'TY	用途／備考 REMARKS
11	六角ﾎﾞﾙﾄ HEXAGONAL HEAD BOLT	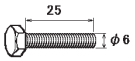	M6X25 SUS304	CODE NO. 000-162-871-10	1	
12	ｹｰﾌﾞﾙ組品 CABLE ASSY.	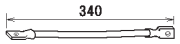	RW-4747	CODE NO. 000-566-000-12	1	
13	ｽﾊﾟｲﾗﾙﾁｭｰﾌﾞ SPIRAL TUBE		SPN-08L *900MM*	CODE NO. 000-179-640-10	1	

(略図の寸法は、参考値です。 DIMENSIONS IN DRAWING FOR REFERENCE ONLY.)

FURUNO ELECTRIC CO., LTD.

C3618-M06-C(2)

FURUNO

CODE NO.	001-507-940-00	03HO-X-9401 -2
TYPE	CP03-35901	1/1

工事材料表

INSTALLATION MATERIALS

番号 NO.	名称 NAME	略図 OUTLINE	型名／規格 DESCRIPTIONS		数量 Q'TY	用途／備考 REMARKS
1	ｼｰﾙﾜｯｼｬｰ SEAL WASHER		03-001-3002-0 ROHS	CODE NO. 300-130-020-10	4	
2	絶縁シート1 INSULATION SHEET 1		03-182-3117-2	CODE NO. 100-387-752-10	4	
3	六角ﾅｯﾄ 1ｼｭ HEXAGONAL NUT	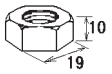	M12 SUS304	CODE NO. 000-167-491-10	8	
4	ﾐｶﾞｷﾏﾙ平座金 FLAT WASHER		M12 SUS304	CODE NO. 000-167-446-10	4	
5	六角ﾎﾞﾙﾄ 全ﾈｼﾞ HEXAGON HEAD SCREW	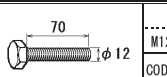	M12X70 SUS304	CODE NO. 000-162-814-10	4	
6	六角ﾅｯﾄ 1ｼｭ HEXAGONAL NUT		M6 SUS304	CODE NO. 000-158-856-10	1	
7	ﾊﾞﾈ座金 SPRING WASHER		M6 SUS304	CODE NO. 000-158-855-10	1	
8	ﾐｶﾞｷ平座金 FLAT WASHER		M6 SUS304	CODE NO. 000-158-854-10	3	
9	六角ﾎﾞﾙﾄ HEXAGONAL HEAD BOLT	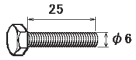	M6X25 SUS304	CODE NO. 000-162-871-10	1	
10	ｹｰﾌﾞﾙ組品 CABLE ASSY.	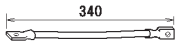	RW-4747	CODE NO. 000-566-000-12	1	

(略図の寸法は、参考値です。 DIMENSIONS IN DRAWING FOR REFERENCE ONLY.)

FURUNO ELECTRIC CO., LTD.

C3624-M01-C

FURUNO

CODE NO.	001-507-950-00	03H0-X-9402 -2
TYPE	CP03-35902	1/2

工事材料表

INSTALLATION MATERIALS

番号 NO.	名称 NAME	略図 OUTLINE	型名／規格 DESCRIPTIONS		数量 Q'TY	用途／備考 REMARKS
1	ｼｰﾙﾜｯｼｬｰ SEAL WASHER		03-001-3002-0 ROHS	CODE NO. 300-130-020-10	4	
2	絶縁シート1 INSULATION SHEET 1		03-182-3117-2	CODE NO. 100-387-752-10	4	
3	圧着端子 CRIMP-ON LUG	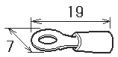	FV2-M4 K	CODE NO. 000-157-229-11	2	
4	ﾛｯｷﾝｸﾞﾜｲﾔｰｻﾄﾞﾙ LOCKING WIRE SADDLE		LWS-1211Z	CODE NO. 000-167-788-11	2	
5	六角ﾅｯﾄ 1ｼｭ HEXAGONAL NUT	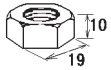	M12 SUS304	CODE NO. 000-167-491-10	8	
6	ﾐｶﾞｷﾏﾙ平座金 FLAT WASHER		M12 SUS304	CODE NO. 000-167-446-10	4	
7	六角ﾎﾞﾙﾄ 全ﾈｼﾞ HEXAGON HEAD SCREW	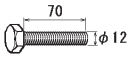	M12X70 SUS304	CODE NO. 000-162-814-10	4	
8	六角ﾅｯﾄ 1ｼｭ HEXAGONAL NUT		M6 SUS304	CODE NO. 000-158-856-10	1	
9	ﾊﾞﾈ座金 SPRING WASHER		M6 SUS304	CODE NO. 000-158-855-10	1	
10	ﾐｶﾞｷ平座金 FLAT WASHER		M6 SUS304	CODE NO. 000-158-854-10	3	

(略図の寸法は、参考値です。 DIMENSIONS IN DRAWING FOR REFERENCE ONLY.)

FURUNO

CODE NO.	001-507-950-00	03H0-X-9402 -2
TYPE	CP03-35902	2/2

工事材料表

INSTALLATION MATERIALS

番号 NO.	名称 NAME	略図 OUTLINE	型名／規格 DESCRIPTIONS		数量 Q'TY	用途／備考 REMARKS
11	六角ﾎﾞﾙﾄ HEXAGONAL HEAD BOLT	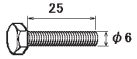	M6X25 SUS304	CODE NO. 000-162-871-10	1	
12	ｹｰﾌﾞﾙ組品 CABLE ASSY.	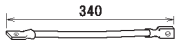	RW-4747	CODE NO. 000-566-000-12	1	
13	ｽﾊﾟｲﾗﾙﾁｭｰﾌﾞ SPIRAL TUBE		SPN-08L *900MM*	CODE NO. 000-179-640-10	1	

(略図の寸法は、参考値です。 DIMENSIONS IN DRAWING FOR REFERENCE ONLY.)

FURUNO

CODE NO.	001-301-200-00	03H0-X-9403 -0
TYPE	CP03-36101	1/1

工事材料表

INSTALLATION MATERIALS

番号 NO.	名称 NAME	略図 OUTLINE	型名／規格 DESCRIPTIONS		数量 Q'TY	用途／備考 REMARKS
1	ｼｰﾙﾜｯｼｬｰ SEAL WASHER	φ30	03-001-3002-0 ROHS	CODE NO. 300-130-020-10	8	
2	六角ﾅｯﾄ 1ｼｭ HEXAGONAL NUT	10 19	M12 SUS304	CODE NO. 000-167-491-10	16	
3	ﾐｶﾞｷﾏﾙ平座金 FLAT WASHER	φ24	M12 SUS304	CODE NO. 000-167-446-10	8	
4	ﾊﾞﾈ座金 SPRING WASHER	22	M12 SUS304	CODE NO. 000-167-397-10	8	
5	六角ﾎﾞﾙﾄ 全ﾈｼﾞ HEXAGON HEAD SCREW	70 φ12	M12X70 SUS304	CODE NO. 000-162-814-10	8	
6	六角ﾅｯﾄ 1ｼｭ HEXAGONAL NUT	5 10	M6 SUS304	CODE NO. 000-158-856-10	1	
7	ﾊﾞﾈ座金 SPRING WASHER	12	M6 SUS304	CODE NO. 000-158-855-10	1	
8	ﾐｶﾞｷ平座金 FLAT WASHER	φ13	M6 SUS304	CODE NO. 000-158-854-10	3	
9	六角ﾎﾞﾙﾄ HEXAGONAL HEAD BOLT	25 φ6	M6X25 SUS304	CODE NO. 000-162-871-10	1	
10	ｹｰﾌﾞﾙ組品 CABLE ASSY.	340	RW-4747	CODE NO. 000-566-000-12	1	

型式/ｺｰﾄﾞ番号が２段の場合、下段より上段に代わる過渡期品であり、どちらかが入っています。　なお、品質は変わりません。

TWO TYPES AND CODES MAY BE LISTED FOR AN ITEM. THE LOWER PRODUCT MAY BE SHIPPED IN PLACE OF THE UPPER PRODUCT.
QUALITY IS THE SAME.
（略図の寸法は、参考値です。　DIMENSIONS IN DRAWING FOR REFERENCE ONLY.）

FURUNO

CODE NO.	001-301-360-00	03H0-X-9404 -0
TYPE	CP03-36102	1/2

工事材料表

INSTALLATION MATERIALS

番号 NO.	名称 NAME	略図 OUTLINE	型名／規格 DESCRIPTIONS		数量 Q'TY	用途／備考 REMARKS
1	ｼｰﾙﾜｯｼｬｰ SEAL WASHER	φ30	03-001-3002-0 ROHS	CODE NO. 300-130-020-10	8	
2	ﾛｯｷﾝｸﾞﾜｲﾔｰｻﾄﾞﾙ LOCKING WIRE SADDLE	24 48	LWS-1316Z	CODE NO. 000-169-148-10	1	
3	六角ﾅｯﾄ 1ｼｭ HEXAGONAL NUT	10 19	M12 SUS304	CODE NO. 000-167-491-10	16	
4	ﾐｶﾞｷﾏﾙ平座金 FLAT WASHER	φ24	M12 SUS304	CODE NO. 000-167-446-10	8	
5	ﾊﾞﾈ座金 SPRING WASHER	22	M12 SUS304	CODE NO. 000-167-397-10	8	
6	六角ﾎﾞﾙﾄ 全ﾈｼﾞ HEXAGON HEAD SCREW	70 φ12	M12X70 SUS304	CODE NO. 000-162-814-10	8	
7	六角ﾅｯﾄ 1ｼｭ HEXAGONAL NUT	5 10	M6 SUS304	CODE NO. 000-158-856-10	1	
8	ﾊﾞﾈ座金 SPRING WASHER	12	M6 SUS304	CODE NO. 000-158-855-10	1	
9	ﾐｶﾞｷ平座金 FLAT WASHER	φ13	M6 SUS304	CODE NO. 000-158-854-10	3	
10	六角ﾎﾞﾙﾄ HEXAGONAL HEAD BOLT	25 φ6	M6X25 SUS304	CODE NO. 000-162-871-10	1	

型式/ｺｰﾄﾞ番号が２段の場合、下段より上段に代わる過渡期品であり、どちらかが入っています。　なお、品質は変わりません。

TWO TYPES AND CODES MAY BE LISTED FOR AN ITEM. THE LOWER PRODUCT MAY BE SHIPPED IN PLACE OF THE UPPER PRODUCT.
QUALITY IS THE SAME.
（略図の寸法は、参考値です。　DIMENSIONS IN DRAWING FOR REFERENCE ONLY.）

FURUNO

CODE NO.	001-301-360-00	03H0-X-9404 -0
TYPE	CP03-36102	2/2

工事材料表

INSTALLATION MATERIALS

番号 NO.	名称 NAME	略図 OUTLINE	型名／規格 DESCRIPTIONS	数量 Q'TY	用途／備考 REMARKS
11	ｹｰﾌﾞﾙ組品 CABLE ASSY.	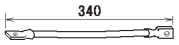	RW-4747 CODE NO. 000-566-000-12	1	
12	ｽﾊﾟｲﾗﾙﾁｭｰﾌﾞ SPIRAL TUBE		SPN-08L *900MM* CODE NO. 000-179-640-10	1	

型式/ｺｰﾄﾞ番号が２段の場合、下段より上段に代わる過渡期品であり、どちらかが入っています。　なお、品質は変わりません。

TWO TYPES AND CODES MAY BE LISTED FOR AN ITEM. THE LOWER PRODUCT MAY BE SHIPPED IN PLACE OF THE UPPER PRODUCT.
QUALITY IS THE SAME.

（略図の寸法は、参考値です。　DIMENSIONS IN DRAWING FOR REFERENCE ONLY.）

FURUNO ELECTRIC CO., LTD.

C3625-M02-A(2)

FURUNO

CODE NO.	001-249-860-00	03HL-X-9401 -3
TYPE	CP03-35201	1/1

工事材料表

INSTALLATION MATERIALS

番号 NO.	名称 NAME	略図 OUTLINE	型名／規格 DESCRIPTIONS	数量 Q'TY	用途／備考 REMARKS
1	ﾎﾞﾙﾄ用ﾊﾟｯｷﾝ GASKET FOR BOLT		03-182-3186-0 CODE NO. 100-386-270-10	6	
2	ｱﾝﾃﾅ取付ﾎﾞﾙﾄ ANTENNA FIXING BOLT	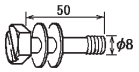	03-182-4188-3 CODE NO. 100-383-603-10	6	
3	接着剤袋詰 ADHESIVE	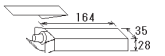	TB5211 50G CODE NO. 001-477-870-00	1	

（略図の寸法は、参考値です。　DIMENSIONS IN DRAWING FOR REFERENCE ONLY.）

FURUNO ELECTRIC CO., LTD.

C3616-M04-B

FURUNO

CODE NO.	008-487-130-00	03FS-X-9403 -8
TYPE	CP03-19101	1/1

工事材料表

INSTALLATION MATERIALS

番号 NO.	名称 NAME	略図 OUTLINE	型名／規格 DESCRIPTIONS		数量 Q'TY	用途／備考 REMARKS
1	ﾋﾟﾝ PIN	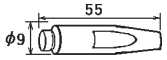	03-141-0301-2 ROHS	CODE NO. 100-266-882-10	2	
2	Oﾘﾝｸﾞ O-RING		JBP-135	CODE NO. 000-171-805-10	1	
3	六角ｽﾘｯﾄﾂﾙ ｾﾑｽB HEX.HEAD SLOT BOLT-B WASHER	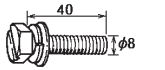	M8X40 SUS304	CODE NO. 000-162-953-10	8	
4	接着剤袋詰 ADHESIVE	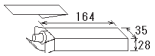	TB5211 50G	CODE NO. 001-477-870-00	1	

（略図の寸法は、参考値です。 DIMENSIONS IN DRAWING FOR REFERENCE ONLY.）

FURUNO ELECTRIC CO ., LTD.

C3464-M04-J

FURUNO

CODE NO.	001-249-880-00	03HL-X-9402 -2
TYPE	CP03-35202	1/1

工事材料表

INSTALLATION MATERIALS

番号 NO.	名称 NAME	略図 OUTLINE	型名／規格 DESCRIPTIONS		数量 Q'TY	用途／備考 REMARKS
1	ﾐｶﾞｷﾏﾙ平座金 FLAT WASHER		M12 SUS304	CODE NO. 000-167-446-10	12	
2	ﾊﾞﾈ座金 SPRING WASHER		M12 SUS304	CODE NO. 000-167-397-10	12	
3	六角ﾎﾞﾙﾄ HEXAGONAL HEAD BOLT	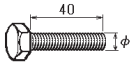	M12X40 SUS304	CODE NO. 000-162-810-10	4	
4	六角ﾎﾞﾙﾄ HEXAGONAL HEAD BOLT	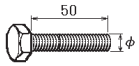	M12X50 SUS304	CODE NO. 000-164-116-10	8	
5	接着剤袋詰 ADHESIVE	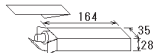	TB5211 50G	CODE NO. 001-477-870-00	1	

（略図の寸法は、参考値です。 DIMENSIONS IN DRAWING FOR REFERENCE ONLY.）

FURUNO ELECTRIC CO ., LTD.

C3618-M02-C

FURUNO

CODE NO.	001-548-440-00	03ID-X-9401 -0
TYPE	CP03-38701	1/1

工事材料表

INSTALLATION MATERIALS

番号 NO.	名称 NAME	略図 OUTLINE	型名／規格 DESCRIPTIONS	数量 Q'TY	用途／備考 REMARKS
1	ｸﾞﾗﾝﾄﾞ用ｶﾞｽｹｯﾄ GLAND GASKET	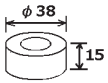	03-163-5521-0 CODE NO. 100-320-160-10	1	
2	ｸﾞﾗﾝﾄﾞ用ｻﾞｶﾞﾈ CABLE GLAND WASHER		JIS F8801 30A用 CODE NO. 000-171-880-10	3	

（略図の寸法は、参考値です。 DIMENSIONS IN DRAWING FOR REFERENCE ONLY.）

FURUNO ELECTRIC CO., LTD.

C3672-M04-A

FURUNO

CODE NO.	001-548-450-00	03ID-X-9402 -0
TYPE	CP03-38702	1/1

工事材料表

INSTALLATION MATERIALS

番号 NO.	名称 NAME	略図 OUTLINE	型名／規格 DESCRIPTIONS	数量 Q'TY	用途／備考 REMARKS
1	ｸﾞﾗﾝﾄﾞ用ｻﾞｶﾞﾈ CABLE GLAND WASHER		JIS F8801 30A用 CODE NO. 000-171-880-10	3	
2	VAｺﾞﾑﾊﾟｯｷﾝ RUBBER PACKING	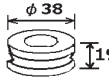	VA-30 CODE NO. 000-160-530-10	1	

（略図の寸法は、参考値です。 DIMENSIONS IN DRAWING FOR REFERENCE ONLY.）

FURUNO ELECTRIC CO., LTD.

C3672-M02-A

FURUNO

CODE NO.	001-548-460-00	03ID-X-9403 -1
TYPE	CP03-38703	1/2

工事材料表

INSTALLATION MATERIALS

番号 NO.	名称 NAME	略図 OUTLINE	型名／規格 DESCRIPTIONS		数量 Q'TY	用途／備考 REMARKS
1	ｼｰﾙﾜｯｼｬｰ SEAL WASHER	φ30	03-001-3002-0 ROHS	CODE NO. 300-130-020-10	4	
2	防食ｺﾞﾑ CORROSION-PROOF RUBBER	380 90	03-195-3129-0	CODE NO. 100-428-010-10	2	
3	圧着端子 CRIMP-ON LUG	21 9	FV2-4 BLU K	CODE NO. 000-157-247-11	3	
4	圧着端子 CRIMP-ON LUG	26 10	FV5.5-4(LF) YEL	CODE NO. 000-166-744-10	2	
5	六角ﾅｯﾄ 1ｼｭ HEXAGONAL NUT	10 19	M12 SUS304	CODE NO. 000-167-491-10	8	
6	平座金 FLAT WASHER	φ24	M12 SUS316L	CODE NO. 000-167-417-10	4	
7	六角ﾎﾞﾙﾄ 全ﾈｼﾞ HEXAGON HEAD SCREW	60 φ12	M12X60 SUS304	CODE NO. 000-162-813-10	4	
8	六角ﾅｯﾄ 1ｼｭ HEXAGONAL NUT	5 10	M6 SUS304	CODE NO. 000-158-856-10	1	
9	ﾊﾞﾈ座金 SPRING WASHER	12	M6 SUS304	CODE NO. 000-158-855-10	1	
10	ﾐｶﾞｷ平座金 FLAT WASHER	φ13	M6 SUS304	CODE NO. 000-158-854-10	3	

（略図の寸法は、参考値です。 DIMENSIONS IN DRAWING FOR REFERENCE ONLY.）

FURUNO ELECTRIC CO., LTD.

FURUNO

CODE NO.	001-548-460-00	03ID-X-9403 -1
TYPE	CP03-38703	2/2

工事材料表

INSTALLATION MATERIALS

番号 NO.	名称 NAME	略図 OUTLINE	型名／規格 DESCRIPTIONS		数量 Q'TY	用途／備考 REMARKS
11	六角ﾎﾞﾙﾄ HEXAGONAL HEAD BOLT	25 φ6	M6X25 SUS304	CODE NO. 000-162-871-10	1	
12	ｹｰﾌﾞﾙ組品 CABLE ASSY.	340	RW-4747	CODE NO. 000-566-000-12	1	

（略図の寸法は、参考値です。 DIMENSIONS IN DRAWING FOR REFERENCE ONLY.）

FURUNO ELECTRIC CO., LTD.

FURUNO

CODE NO.	000-086-743	03EP-X-9405-2
TYPE	CP03-16400	

工事材料表 INSTALLATION MATERIALS

WRJ-9 レーダー方形導波管工事用 FOR RADAR RECTANGULAR WAVEGUIDE INSTALLATION

008-470-010 CP03-16401 (NO.1~NO.12)

番号 No.	名称 NAME	略図 OUTLINE	型名／規格 DESCRIPTIONS	数量 Q'TY	用途／備考 REMARKS
1	六角セムスAスリ割付 HEX.BOLT(SLOTTED WASHERHEAD)	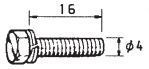	M4X16 SUS304 CODE NO. 000-881-912	80	
2	Oリング O-RING		AS568-128 1115-70 CODE NO. 000-851-842	20	
3	コウシヨウWG.Hベンド WAVEGUIDE H-BEND		RWA-1040 B-108 CODE NO. 310-100-160	2	
4	チョークフランジ WAVEGUIDE FLANGE (CHOKE)	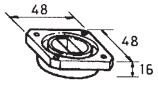	WRJ-9 BRASS CODE NO. 000-879-242	7	
5	カバーフランジ WAVEGUIDE FLANGE (PLAIN)	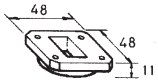	WRJ-9 BRASS CODE NO. 000-879-262	7	
6	導波管保護ゴム RUBBER CUSHION	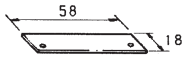	RWA-1011-0 CODE NO. 310-110-110	15	
7	防水フィルム WATERTIGHT FILM	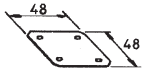	03-009-0368-0 CODE NO. 300-903-680	1	
8	導波管押え(3)E型 WAVEGUIDE CLAMP (3) E-TYPE	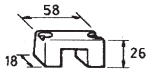	RSB-2007-0 CODE NO. 360-220-070	15	
9	六角ボルトスリ割付 HEX. BOLT (SLOTTED HEAD)	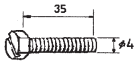	M4X35 SUS304 CODE NO. 000-862-118	35	
10	ミカキ平座金 FLAT WASHER		M4 SUS304 CODE NO. 000-864-126	65	

FR-1222X/1622X/2020X
FR-2822X/FAR-2822X
FR-2120W/2150W
FR-2825W/FAR-2825W
FR-2855W/FAR-2855W
(略図の寸法は、参考値です。)

図番 (1/2)
DWG. NO. C3006-M06-D

FURUNO

CODE NO.	000-086-743	03EP-X-9406-2
TYPE	CP03-16400	

工事材料表 INSTALLATION MATERIALS

WRJ-9 レーダー方形導波管工事用 FOR RADAR RECTANGULAR WAVEGUIDE INSTALLATION

番号 No.	名称 NAME	略図 OUTLINE	型名／規格 DESCRIPTIONS	数量 Q'TY	用途／備考 REMARKS
11	バネ座金 SPRING WASHER		M4 SUS304 CODE NO. 000-864-256	35	
12	六角ナット HEX. NUT		M4 SUS304 CODE NO. 000-863-106	35	
13	WG貫通金物組立 THRU-DECK WAVEGUIDE	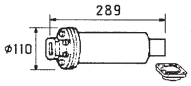	RWG-1000-0 CODE NO. 310-710-000	1	
14	導波管*1 WAVEGUIDE STRAIGHT	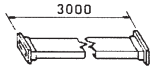	RWA-1020 A-107A CODE NO. 310-100-420	4	
			CODE NO.		
			CODE NO.		
			CODE NO.		
			CODE NO.		
			CODE NO.		
			CODE NO.		

*1 別梱包 PACKED SEPARATELY.
FR-1222X/1622X/2020X
FR-2822X/FAR-2822X
FR-2120W/2150W
FR-2825W/FAR2825W
FR-2855W/FAR-2855W
(略図の寸法は、参考値です。)

図番 (2/2)
DWG. NO. C3006-M07-D

FURUNO

CODE NO.	008-470-010-00	03EP-X-9423 -10
TYPE	CP03-16401	1/2

工事材料表

INSTALLATION MATERIALS

番号 NO.	名称 NAME	略図 OUTLINE	型名／規格 DESCRIPTIONS		数量 Q'TY	用途／備考 REMARKS
1	防水フィルム WATERTIGHT FILM	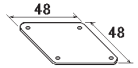	03-009-0368-0 ROHS	CODE NO. 300-903-680-10	1	
2	Oリング(DIASEAL) O-RING(DIASEAL)		AS568-128	CODE NO. 000-172-180-10	20	
3	バネ座金 SPRING WASHER		M4 SUS304	CODE NO. 000-167-405-10	35	
4	六角ナット 1シュ HEX.NUT		M4 SUS304	CODE NO. 000-167-488-10	35	
5	ミガキ丸平座金 FLAT WASHER		M4 SUS304	CODE NO. 000-167-455-10	65	
6	六角スリワリ セムスA HEX.BOLT(SLOTTED WASHER HEAD)	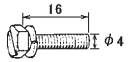	M4X16 SUS304	CODE NO. 000-162-933-10	80	
7	六角スリワリ ボルト HEXAGONAL HEAD SLOT BOLT	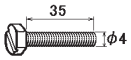	M4X35 SUS304	CODE NO. 000-162-894-10	35	
8	導波管押え3E型 WAVEGUIDE CLAMP	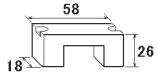	RSB-2007-2	CODE NO. 360-220-072-10	15	
9	導波管保護ゴム RUBBEW CUSHION	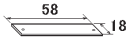	RWA-1011-0 ROHS	CODE NO. 310-110-110-10	15	
10	工事用WG.Hベンド WABEGUIDE H-BEND		RWA-1040 B-108	CODE NO. 310-100-160-00	2	

(略図の寸法は、参考値です。 DIMENSIONS IN DRAWING FOR REFERENCE ONLY.)

FURUNO

CODE NO.	008-470-010-00	03EP-X-9423 -10
TYPE	CP03-16401	2/2

工事材料表

INSTALLATION MATERIALS

番号 NO.	名称 NAME	略図 OUTLINE	型名／規格 DESCRIPTIONS		数量 Q'TY	用途／備考 REMARKS
11	カバーフランジ FLANGE	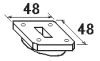	WRJ-9	CODE NO. 000-164-500-10	7	
12	チョークフランジ CHOKE FLANGE	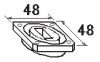	WRJ-9 オウドウ	CODE NO. 000-179-919-10	7	

(略図の寸法は、参考値です。 DIMENSIONS IN DRAWING FOR REFERENCE ONLY.)

FURUNO

CODE NO.	008-470-020-00	03CQ-X-9420 -6
TYPE	CP03-16411	1/1

工事材料表

INSTALLATION MATERIALS

MARINE RADER　　FOR FR-9 RECTGUIDE (FLEXIBLE WAVEGUIDE)

番号 NO.	名称 NAME	略図 OUTLINE	型名／規格 DESCRIPTIONS		数量 Q'TY	用途／備考 REMARKS
1	防水ﾌｨﾙﾑ WATERTIGHT FILM	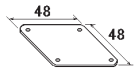	03-009-0368-0 ROHS	CODE NO. 300-903-680-10	1	
2	ｸﾞﾗﾝﾄﾞ本体 TRUK-DECK CABLE GLAND	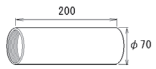	03-009-0521-1 ROHS	CODE NO. 100-207-551-10	1	
3	座金 WASHER		03-009-0522-0 ROHS	CODE NO. 100-207-560-10	2	
4	ﾊﾟｯｷﾝ（1） RUBBER PACKING	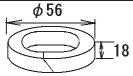	03-009-0523-0 ROHS	CODE NO. 100-207-570-10	2	
5	ﾊﾟｯｷﾝ(2) RUBBER PACKING(2)	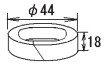	03-009-0524-0 ROHS	CODE NO. 100-207-580-10	2	
6	Oﾘﾝｸﾞ(DIASEAL) O-RING(DIASEAL)		AS568-128	CODE NO. 000-172-180-10	3	
7	ｸﾞﾗﾝﾄﾞ用締付 CABLE GLAND NIPPLE		JIS F8801 45ｺｳ	CODE NO. 000-171-869-10	1	
8	六角ｽﾘﾜﾘ ｾﾑｽB HEX.HEAD SLOT BOLT-B WASHER		M4X16 SUS304	CODE NO. 000-162-940-10	4	

（略図の寸法は、参考値です。　DIMENSIONS IN DRAWING FOR REFERENCE ONLY.）

FURUNO ELECTRIC CO ., LTD.

C3006-M01-K

FURUNO

CODE NO.	001-418-420-00	03GL-X-9436 -0
TYPE	CP03-25604	1/1

工事材料表

INSTALLATION MATERIALS

番号 NO.	名称 NAME	略図 OUTLINE	型名／規格 DESCRIPTIONS		数量 Q'TY	用途／備考 REMARKS
1	+ﾅﾍﾞｾﾑｽB WASHER HEAD SCREW *B*	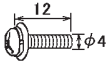	M4X12 C2700W MBN12	CODE NO. 000-163-192-10	4	

型式/ｺｰﾄﾞ番号が２段の場合、下段より上段に代わる過渡期品であり、どちらかが入っています。　なお、品質は変わりません。

TWO TYPES AND CODES MAY BE LISTED FOR AN ITEM.　THE LOWER PRODUCT MAY BE SHIPPED IN PLACE OF THE UPPER PRODUCT.
QUALITY IS THE SAME.

（略図の寸法は、参考値です。　DIMENSIONS IN DRAWING FOR REFERENCE ONLY.）

FURUNO ELECTRIC CO ., LTD.　　CN

C3559-M04-A

FURUNO

CODE NO.	001-115-510-00	03HE-X-9407 -0
TYPE	CP03-33202	1/1

工事材料表

INSTALLATION MATERIALS

RCU-021,FSV-8501

番号 NO.	名称 NAME	略図 OUTLINE	型名／規格 DESCRIPTIONS		数量 Q'TY	用途／備考 REMARKS
1	KB取付金具 KB FIXTURE	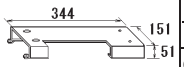	03-177-2201-0	CODE NO. 100-358-860-10	1	

型式/ｺｰﾄﾞ番号が２段の場合、下段より上段に代わる過渡期品であり、どちらかが入っています。　なお、品質は変わりません。

TWO TYPES AND CODES MAY BE LISTED FOR AN ITEM. THE LOWER PRODUCT MAY BE SHIPPED IN PLACE OF THE UPPER PRODUCT. QUALITY IS THE SAME.

（略図の寸法は、参考値です。　DIMENSIONS IN DRAWING FOR REFERENCE ONLY.）

FURUNO ELECTRIC CO., LTD.

C3584-M07-A

FURUNO

CODE NO.	001-537-900-00	10DA-X-9401 -0
TYPE	CP10-09601	1/1

工事材料表

INSTALLATION MATERIALS

番号 NO.	名称 NAME	略図 OUTLINE	型名／規格 DESCRIPTIONS		数量 Q'TY	用途／備考 REMARKS
1	ﾈｼﾞｷｬｯﾌﾟ CAP		03-177-2204-0	CODE NO. 100-358-880-10	4	
2	+ﾊﾟｲﾝﾄﾞﾀｯﾋﾟﾝﾄﾞｼｭ TAPPING SCREW		5X20 SUS304	CODE NO. 000-171-997-10	4	
3	冷間圧造蝶ﾅｯﾄ WING NUT	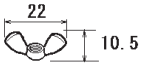	M4 SUS304	CODE NO. 000-167-545-10	4	
4	寸切ﾎﾞﾙﾄ THREADED ROD	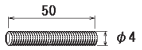	M4X50 SUS304	CODE NO. 000-162-679-10	4	
5	+ﾊﾟｲﾝﾄﾞｺﾈｼﾞ BINDING HEAD SCREW	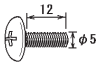	M5X12 SUS304	CODE NO. 000-171-999-10	4	

（略図の寸法は、参考値です。　DIMENSIONS IN DRAWING FOR REFERENCE ONLY.）

FURUNO ELECTRIC CO., LTD.

C1363-M13-A

FURUNO

CODE NO.	001-489-150-00	03IC-X-9402 -1
TYPE	CP03-37801	1/1

工事材料表

INSTALLATION MATERIALS

番号 NO.	名称 NAME	略図 OUTLINE	型名／規格 DESCRIPTIONS		数量 Q'TY	用途／備考 REMARKS
1	ｲﾗｯｸｽﾁｭｰﾌﾞ A INSULATION TUBE		3.0X0.3 YEL *50CM*	CODE NO. 000-162-841-10	8	
2	+ﾄﾗｽﾀｯﾋﾟﾝﾈｼﾞ 1ｼｭ SELF-TAPPING SCREW	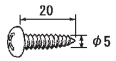	5X20 SUS304	CODE NO. 000-162-608-10	4	
3	圧着端子 CRIMP-ON LUG	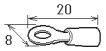	FV1.25-4(LF) RED K	CODE NO. 000-166-666-11	9	
4	圧着端子 CRIMP-ON LUG	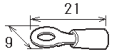	FV2-4 BLU K	CODE NO. 000-157-247-11	3	
5	圧着端子 CRIMP-ON LUG	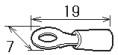	FV2-M3 BLU K FV2-M3 BLU	CODE NO. 000-157-250-11 000-157-250-10	1	
6	ｺﾈｸﾀ(ﾓｼﾞｭﾗｰ) MODULAR CONNCTOR	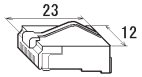	MPS588-C	CODE NO. 000-166-044-10	3	

型式/ｺｰﾄﾞ番号が２段の場合、下段より上段に代わる過渡期品であり、どちらかが入っています。　なお、品質は変わりません。

TWO TYPES AND CODES MAY BE LISTED FOR AN ITEM. THE LOWER PRODUCT MAY BE SHIPPED IN PLACE OF THE UPPER PRODUCT.
QUALITY IS THE SAME.

（略図の寸法は、参考値です。　DIMENSIONS IN DRAWING FOR REFERENCE ONLY.）

FURUNO ELECTRIC CO., LTD.

C3652-M02-B

FURUNO

CODE NO.	001-558-540-00	03IC-X-9403 -0
TYPE	CP03-37803	1/1

工事材料表

INSTALLATION MATERIALS

DC仕様

番号 NO.	名称 NAME	略図 OUTLINE	型名／規格 DESCRIPTIONS		数量 Q'TY	用途／備考 REMARKS
1	ｲﾗｯｸｽﾁｭｰﾌﾞ A INSULATION TUBE		3.0X0.3 YEL *50CM*	CODE NO. 000-162-841-10	8	
2	+ﾄﾗｽﾀｯﾋﾟﾝﾈｼﾞ 1ｼｭ SELF-TAPPING SCREW	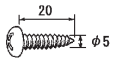	5X20 SUS304	CODE NO. 000-162-608-10	4	
3	圧着端子 CRIMP-ON LUG	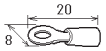	FV1.25-4(LF) RED K	CODE NO. 000-166-666-11	9	
4	圧着端子 CRIMP-ON LUG	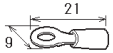	FV2-4 BLU K	CODE NO. 000-157-247-11	1	
5	圧着端子 CRIMP-ON LUG	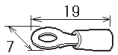	FV2-M3 BLU K	CODE NO. 000-157-250-11	1	
6	圧着端子 CRIMP-ON LUG	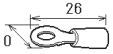	FV5.5-4(LF) YEL K	CODE NO. 000-166-744-11	2	
7	ｺﾈｸﾀ(ﾓｼﾞｭﾗｰ) MODULAR CONNCTOR	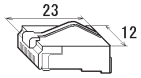	MPS588-C	CODE NO. 000-166-044-10	3	

（略図の寸法は、参考値です。　DIMENSIONS IN DRAWING FOR REFERENCE ONLY.）

FURUNO ELECTRIC CO., LTD.

C3652-M06-A

FURUNO

CODE NO.	001-547-980-00	03ID-X-9404 -0
TYPE	CP03-38801	1/1

工事材料表

INSTALLATION MATERIALS

番号 NO.	名称 NAME	略図 OUTLINE	型名／規格 DESCRIPTIONS	数量 Q'TY	用途／備考 REMARKS
1	圧着端子 CRIMP-ON LUG	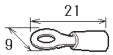	FV2-4 BLU K CODE NO. 000-157-247-11	2	
2	圧着端子 CRIMP-ON LUG	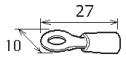	FV5.5-3(LF) CODE NO. 000-168-400-10	1	

（略図の寸法は、参考値です。 DIMENSIONS IN DRAWING FOR REFERENCE ONLY.）

FURUNO ELECTRIC CO., LTD.

C3672-M01-A

FURUNO

CODE NO.	001-574-480-00	03IC-X-9502 -0
TYPE	FP03-09880	1/1

付属品表

ACCESSORIES

番号 NO.	名称 NAME	略図 OUTLINE	型名／規格 DESCRIPTIONS	数量 Q'TY	用途／備考 REMARKS
1	KB直付金具 KB FIXING PLATE		03-163-7521-1 CODE NO. 100-306-251-10	1	
2	+ｰﾅﾍﾞｾﾑｽB WASHER HEAD SCREW *B*	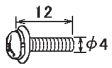	M4X12 C2700W MBNI2 CODE NO. 000-163-192-10	2	
3	ｸﾘｱﾊﾞﾝﾎﾟﾝ RUBBER FOOT		TM-180-302 CODE NO. 000-166-468-10	3	
4	ｸﾞﾛﾒｯﾄ GROMMET	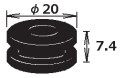	TM-346-2 CODE NO. 000-196-847-10	1	

（略図の寸法は、参考値です。 DIMENSIONS IN DRAWING FOR REFERENCE ONLY.）

FURUNO ELECTRIC CO., LTD.

CN

C3652-F01-A

FURUNO

CODE NO.	001-419-140-00	03GL-X-9512 -2
TYPE	FP03-09860	1/1

付属品表

ACCESSORIES

番号 NO.	名称 NAME	略図 OUTLINE	型名／規格 DESCRIPTIONS		数量 Q'TY	用途／備考 REMARKS
1	KB直付金具(T) KEYBOARD FIXTURE	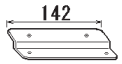	03-163-7821-1 ROHS	CODE NO. 100-306-291-10	1	
2	ﾌﾞﾗｲﾝﾄﾞｼｰﾙ BLIND SEAL		22-020-1005-1 ROHS	CODE NO. 100-173-591-10	3	
3	ﾅｰﾅﾍﾞｾﾑｽB WASHER HEAD SCREW *B*	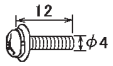	M4X12 C2700W MBNI2	CODE NO. 000-163-192-10	2	
4	ｸﾘｱﾊﾞﾝﾎﾞﾝ RUBBER FOOT		TM-180-302	CODE NO. 000-166-468-10	2	
5	ｸﾞﾛﾒｯﾄ GROMMET	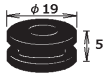	TM-346-3	CODE NO. 000-196-848-10	1	

（略図の寸法は、参考値です。 DIMENSIONS IN DRAWING FOR REFERENCE ONLY.）

FURUNO

表１ TABLE 1

寸法区分（mm） DIMENSION	公差（mm） TOLERANCE
L≦50	±1.5
50<L≦100	±2.5
100<L≦500	±3
500<L≦1000	±4
1000<L≦2000	±5
2000<L≦4000	±7

表２ TABLE 2

アンテナ型式 ANTENNA TYPE	XN12CF (120cm型)	XN20CF (200cm型)	XN24CF (240cm型)
A：空中線長 ANTENNA LENGTH	1,300±10mm	2,100±10mm	2,600±10mm
B：回転安全空間 ANTENNA CLEARANCE	1,500mm	2,300mm	2,800mm
総質量（±10%） TOTAL MASS	48.6kg	50.7kg	51.9kg

補強リブの板厚は取付台の半分程度。
溶接は、取付用ボルト・平座金の座面にかからぬこと。
補強リブはマスト支柱中心と取付穴の中心を結ぶ方向に取り付けること。

THICKNESS OF RIB: t/2 (HALF OF PLATFORM PLATE)
AVOID BOLT & WASHER LOCATIONS ON THE PLATFORM WHEN WELDING THE RIBS.
THE RIBS SHOULD BE WELDED IN THE LINE WITH THE STANCHION CENTER AND FIXING HOLES CENTER.

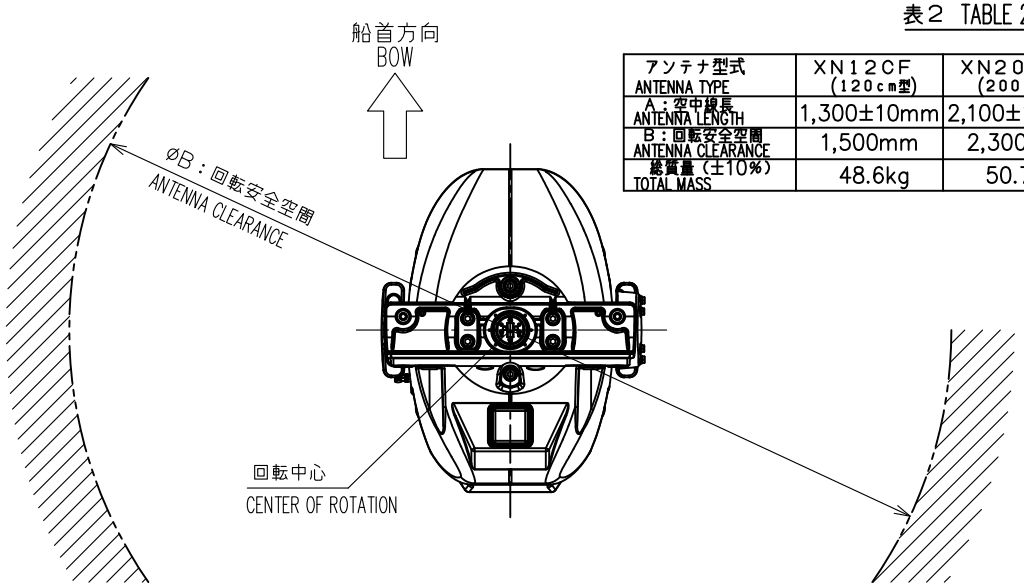

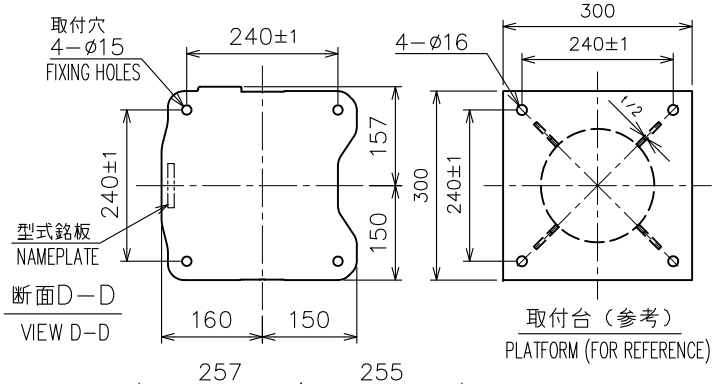

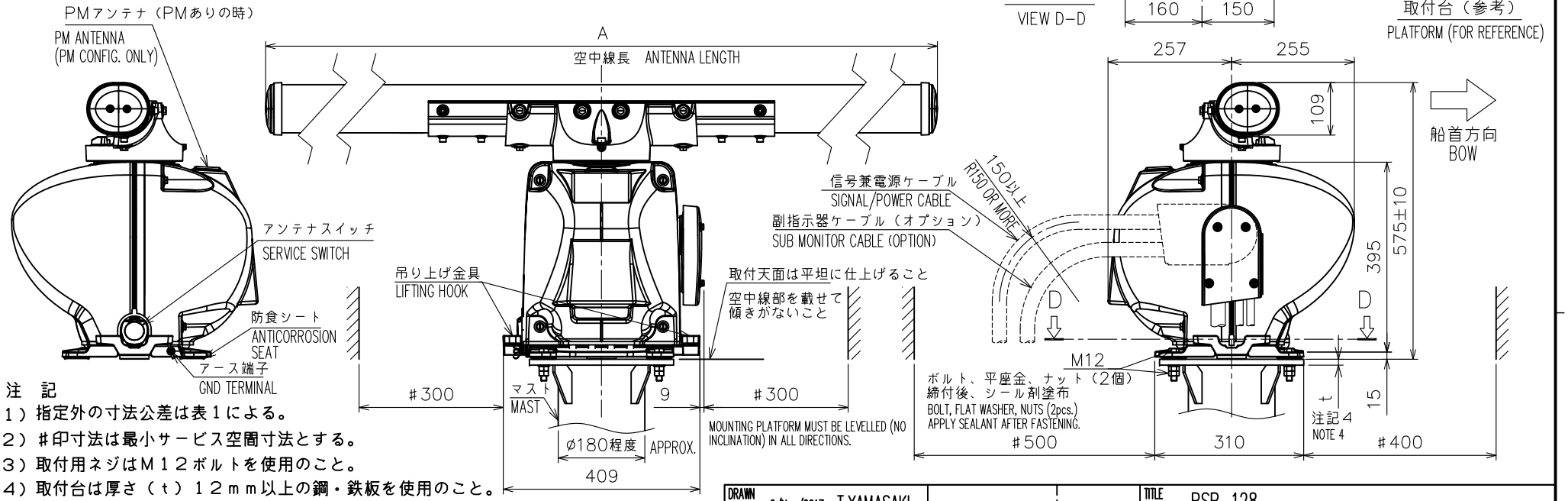

注　記

1）指定外の寸法公差は表１による。
2）＃印寸法は最小サービス空間寸法とする。
3）取付用ネジはＭ１２ボルトを使用のこと。
4）取付台は厚さ（ｔ）１２ｍｍ以上の鋼・鉄板を使用のこと。

NOTE

1. TABLE 1 INDICATES TOLERANCE OF DIMENSIONS WHICH IS NOT SPECIFIED.
2. #: MINIMUM SERVICE CLEARANCE.
3. USE M12 BOLTS FOR FIXING THE UNIT.
4. THICKNESS OF PLATFORM (t): 12 mm OR MORE STEEL PLATE.

DRAWN 6/Nov/2017 T.YAMASAKI		TITLE	RSB-128
CHECKED 6/Nov/2017 H.MAKI		名称	空中線部（PMあり／なし、氷結防止なし）
APPROVED 6/Nov/2017 H.MAKI	FAR-2xx8ser. FAR-3210ser.		外寸図
SCALE 1/12 MASS 表2参照 SEE TABLE 2		NAME	ANTENNA UNIT (PM Y/N, NO DE-ICER)
DWG.No. C3616-G02- G	REF.No. 03-182-310G-8		OUTLINE DRAWING

FURUNO ELECTRIC CO., LTD.

FURUNO

表１ TABLE 1

寸法区分（mm） DIMENSION	公差（mm） TOLERANCE
L≦50	±1.5
50<L≦100	±2.5
100<L≦500	±3
500<L≦1000	±4
1000<L≦2000	±5
2000<L≦4000	±7

表２ TABLE 2

アンテナ型式 ANTENNA TYPE	XN12CF (120cm型)	XN20CF (200cm型)	XN24CF (240cm型)
A：空中線長 ANTENNA LENGTH	1,300±10mm	2,100±10mm	2,600±10mm
B：回転安全空間 ANTENNA CLEARANCE	1,500mm	2,300mm	2,800mm
総質量（±10%） TOTAL MASS	49.7kg	51.8kg	53.0kg

補強リブの板厚は取付台の半分程度。
溶接は、取付用ボルト・平座金の座面にかからぬこと。
補強リブはマスト支柱中心と取付穴の中心を結ぶ方向に取り付けること。

THICKNESS OF RIB: t/2 (HALF OF PLATFORM PLATE)
AVOID BOLT & WASHER LOCATIONS ON THE PLATFORM WHEN WELDING THE RIBS.
THE RIBS SHOULD BE WELDED IN THE LINE WITH THE STANCHION CENTER AND FIXING HOLES CENTER.

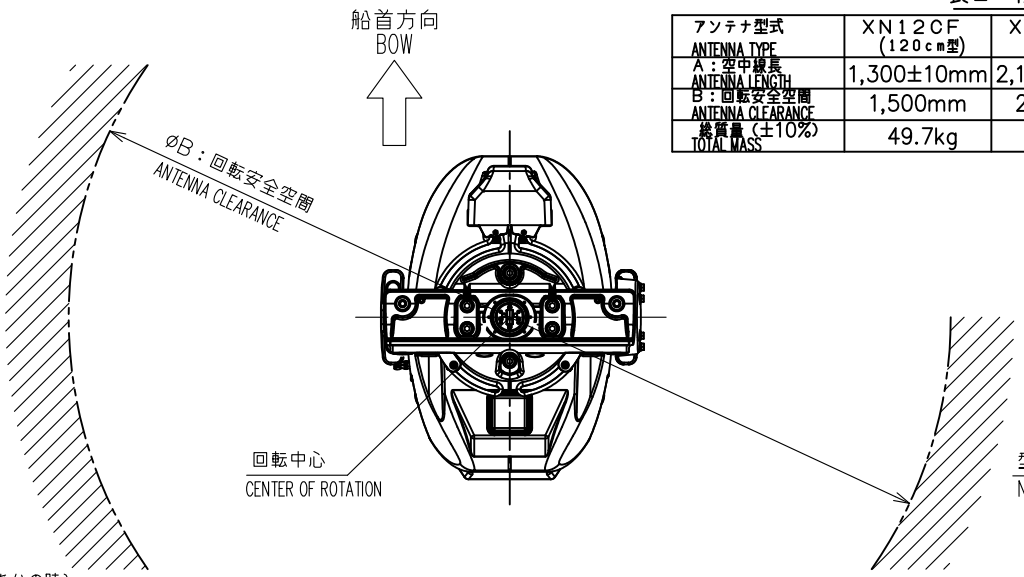

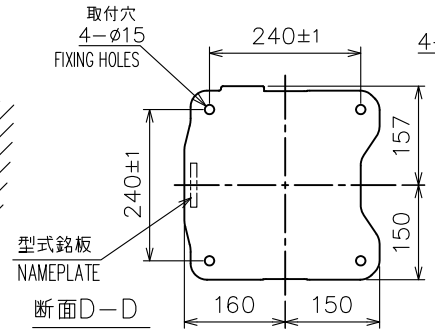

断面D−D
VIEW D-D

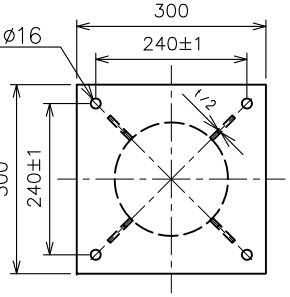

取付台（参考）
PLATFORM (FOR REFERENCE)

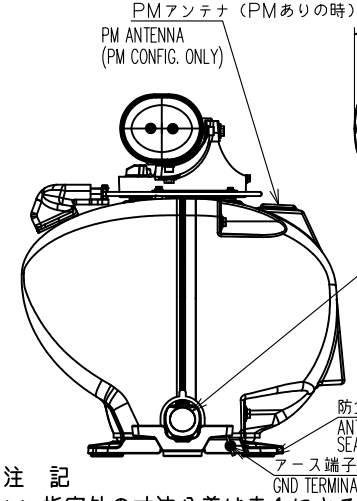

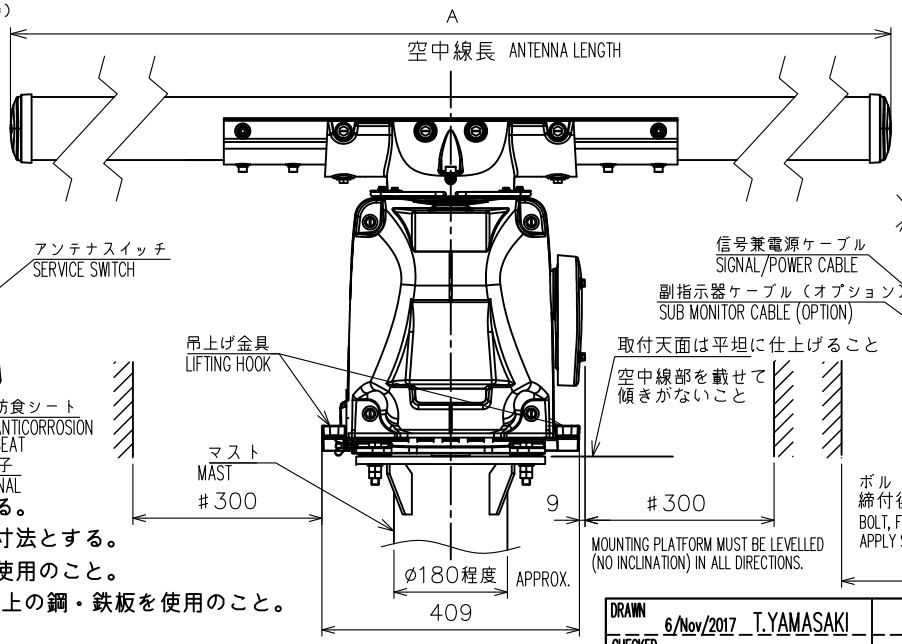

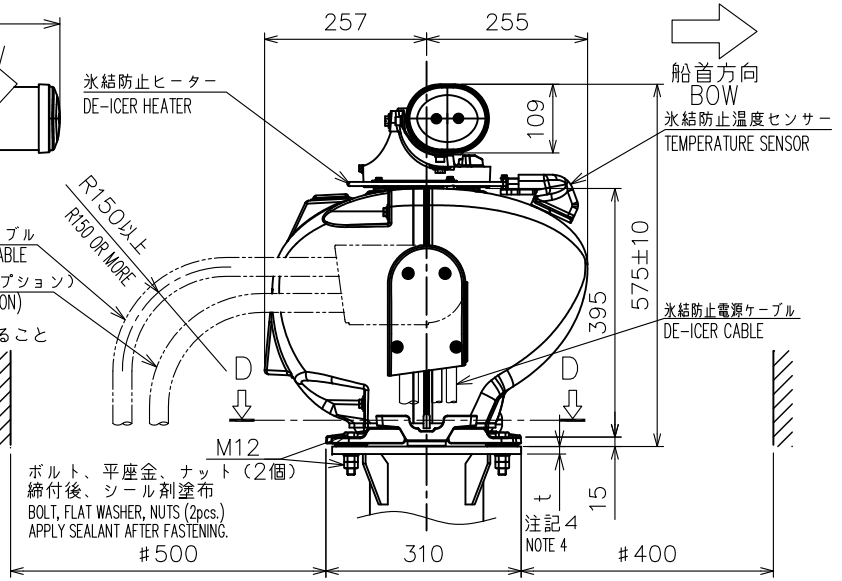

注　記
1）指定外の寸法公差は表１による。
2）＃印寸法は最小サービス空間寸法とする。
3）取付用ネジはＭ１２ボルトを使用のこと。
4）取付台は厚さ（t）12mm以上の鋼・鉄板を使用のこと。

NOTE
1. TABLE 1 INDICATES TOLERANCE OF DIMENSIONS WHICH IS NOT SPECIFIED.
2. #: MINIMUM SERVICE CLEARANCE.
3. USE M12 BOLTS FOR FIXING THE UNIT.
4. THICKNESS OF PLATFORM (t): 12 mm OR MORE STEEL PLATE.

DRAWN 6/Nov/2017 T.YAMASAKI		TITLE	RSB-128
CHECKED 6/Nov/2017 H.MAKI		名称	空中線部（PMあり／なし、氷結防止付）
APPROVED 7/Nov/2017 H.MAKI	FAR-2xx8ser. FAR-3210ser.		外寸図
SCALE 1/12	MASS 表2参照 SEE TABLE 2	NAME	ANTENNA UNIT (PM Y/N, W/ DE-ICER)
DWG.No. C3616-G03- F	REF.No. 03-182-311G-7		OUTLINE DRAWING

FURUNO ELECTRIC CO., LTD.

D-2

FURUNO

表１ TABLE 1

寸法区分（mm） DIMENSION	公差（mm） TOLERANCE
L≦50	±1.5
50<L≦100	±2.5
100<L≦500	±3
500<L≦1000	±4
1000<L≦2000	±5
2000<L≦4000	±7

表２ TABLE 2

アンテナ型式 ANTENNA TYPE	XN12CF (120cm型)	XN20CF (200cm型)	XN24CF (240cm型)
A：空中線長 ANTENNA LENGTH	1,300±10mm	2,100±10mm	2,600±10mm
B：回転安全空間 ANTENNA CLEARANCE	1,500mm	2,300mm	2,800mm
総質量（±10%） TOTAL MASS	49kg	51kg	52kg

補強リブの板厚は取付台の半分程度。
溶接は、取付用ボルト・平座金の座面にかからぬこと。
補強リブはマスト支柱中心と取付穴の中心を結ぶ方向に取り付けること。
THICKNESS OF RIB: t/2 (HALF OF PLATFORM PLATE)
AVOID BOLT & WASHER LOCATIONS ON THE PLATFORM WHEN WELDING THE RIBS.
THE RIBS SHOULD BE WELDED IN THE LINE WITH THE STANCHION CENTER AND FIXING HOLES CENTER.

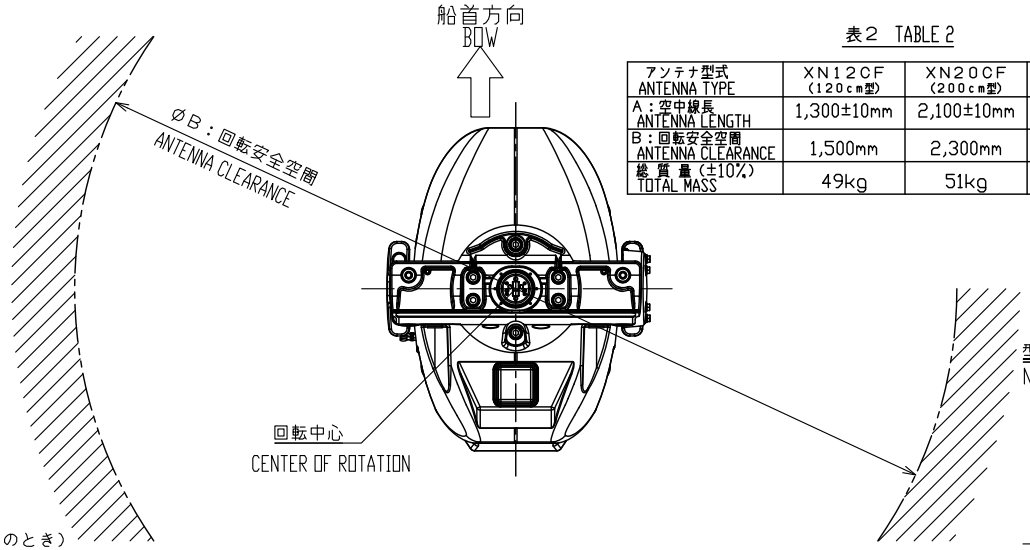

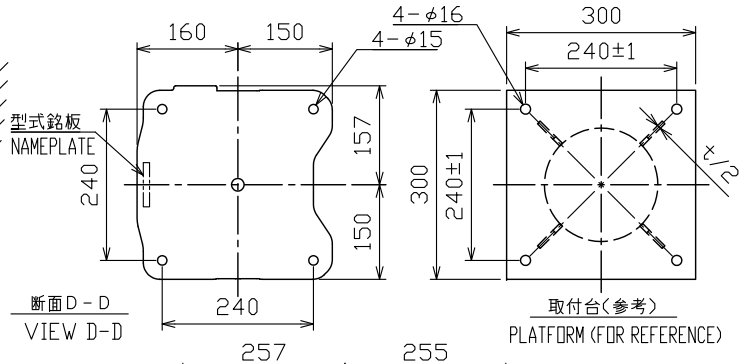

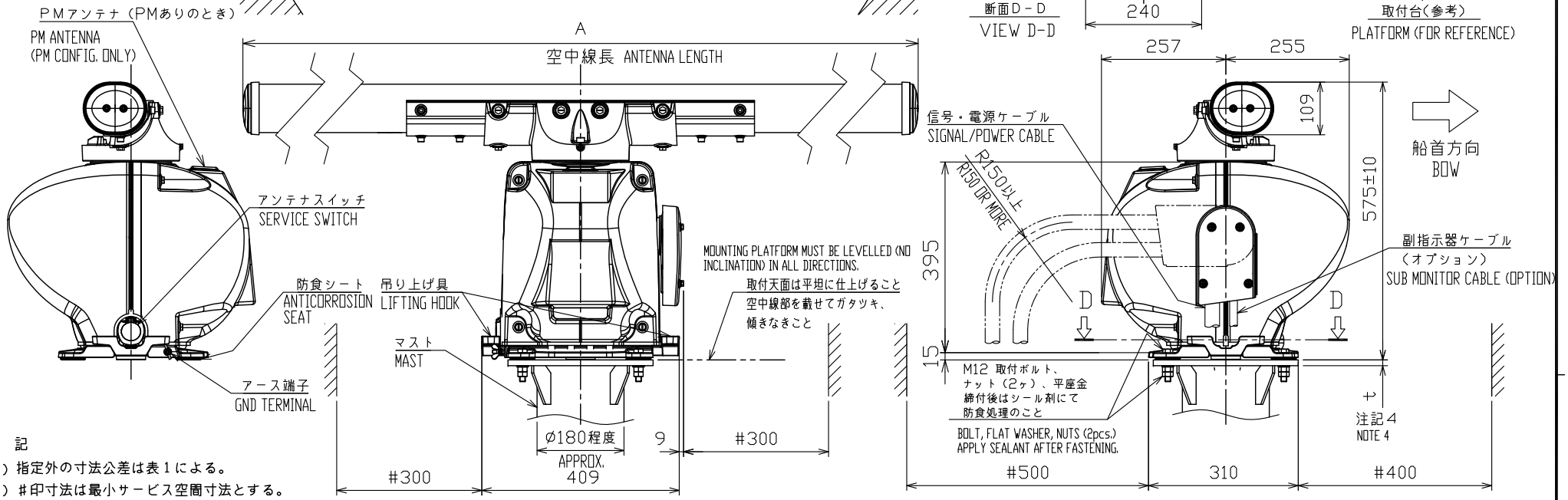

注　記

１）指定外の寸法公差は表１による。
２）＃印寸法は最小サービス空間寸法とする。
３）取付用ネジはＭ１２ボルトを使用のこと。
４）取付台には厚さ（ｔ）１２ｍｍ以上の鋼・鉄板を使用のこと。

NOTE

1. TABLE 1 INDICATES TOLERANCE OF DIMENSIONS WHICH IS NOT SPECIFIED.
2. #: MINIMUM SERVICE CLEARANCE.
3. USE M12 BOLTS FOR FIXING THE UNIT.
4. THICKNESS OF PLATFORM (t): 12 mm OR MORE STEEL PLATE.

DRAWN 15/Oct/2019 T.YAMASAKI		TITLE	RSB-128
CHECKED 15/Oct/2019 H.MAKI		名称	空中線部（PMあり／なし、氷結防止なし）
APPROVED 17/Oct/2019 H.MAKI	FAR-2xx8-NXT		外寸図
SCALE 1/12	MASS 表2参照 SEE TABLE 2	NAME	ANTENNA UNIT (PM Y/N, NO DE-ICER)
DWG.No. C3679-G01- A	REF.No. 03-199-310G-2		OUTLINE DRAWING

FURUNO ELECTRIC CO., LTD.

FURUNO

表１ TABLE 1

寸法区分（mm） DIMENSION	公差（mm） TOLERANCE
L≦50	±1.5
50<L≦100	±2.5
100<L≦500	±3
500<L≦1000	±4
1000<L≦2000	±5
2000<L≦4000	±7

表２ TABLE 2

アンテナ型式 ANTENNA TYPE	XN12CF (120cm型)	XN20CF (200cm型)	XN24CF (240cm型)
A：空中線長 ANTENNA LENGTH	1,300±10mm	2,100±10mm	2,600±10mm
B：回転安全空間 ANTENNA CLEARANCE	1,500mm	2,300mm	2,800mm
総質量（±10%） TOTAL MASS	50kg	52kg	53kg

補強リブの板厚は取付台の半分程度。
溶接は、取付用ボルト・平座金の座面にかからぬこと。
補強リブはマスト支柱中心と取付穴の中心を結ぶ方向に取り付けること。
THICKNESS OF RIB: t/2 (HALF OF PLATFORM PLATE)
AVOID BOLT & WASHER LOCATIONS ON THE PLATFORM WHEN WELDING THE RIBS.
THE RIBS SHOULD BE WELDED IN THE LINE WITH THE STANCHION CENTER AND FIXING HOLES CENTER.

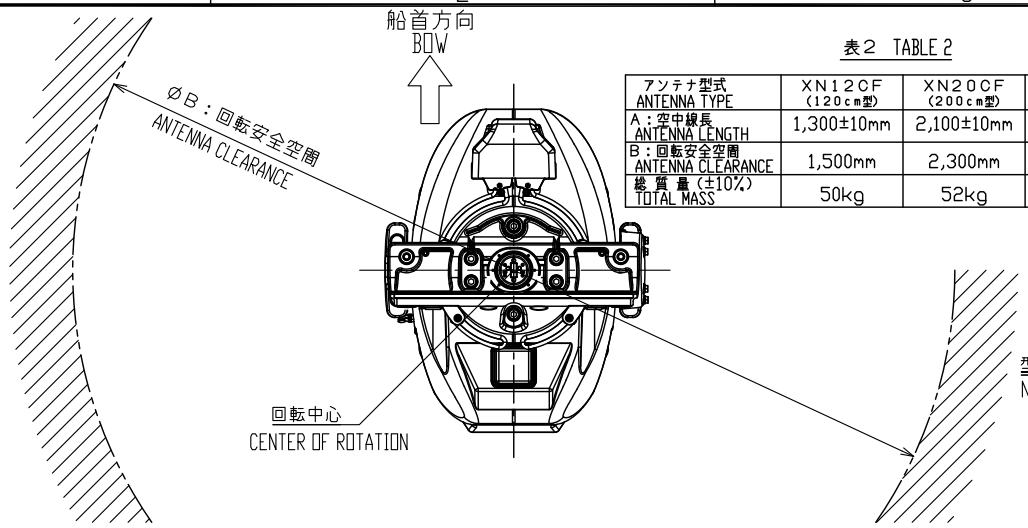

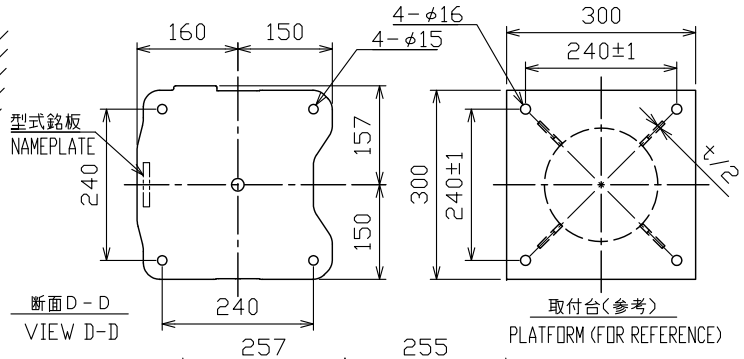

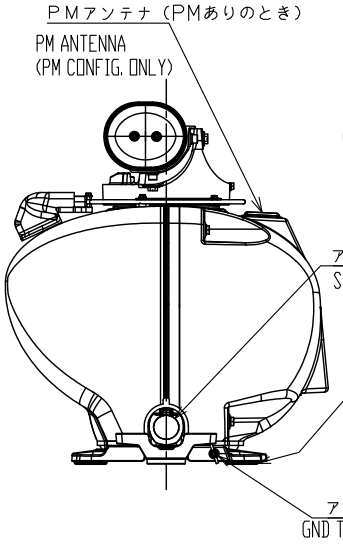

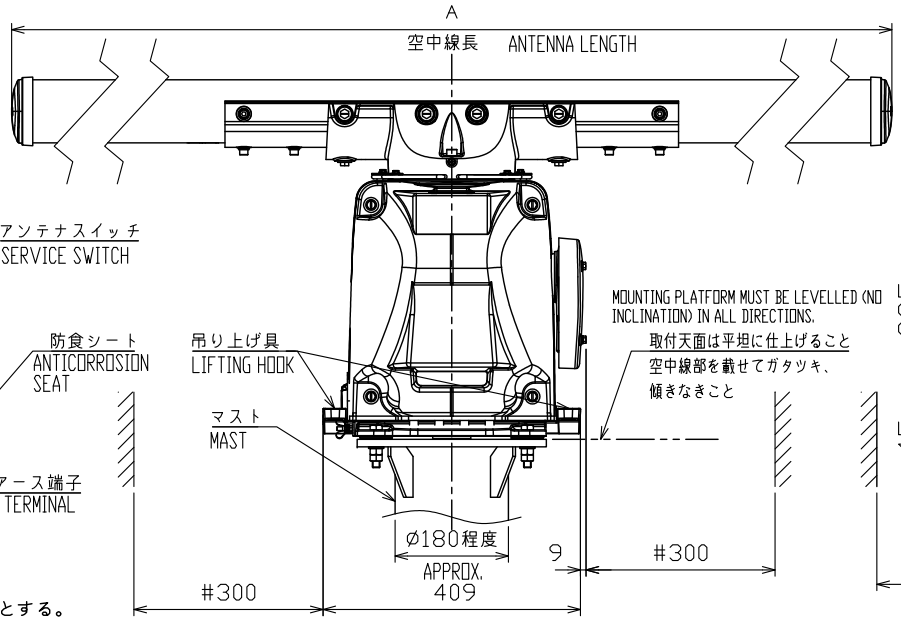

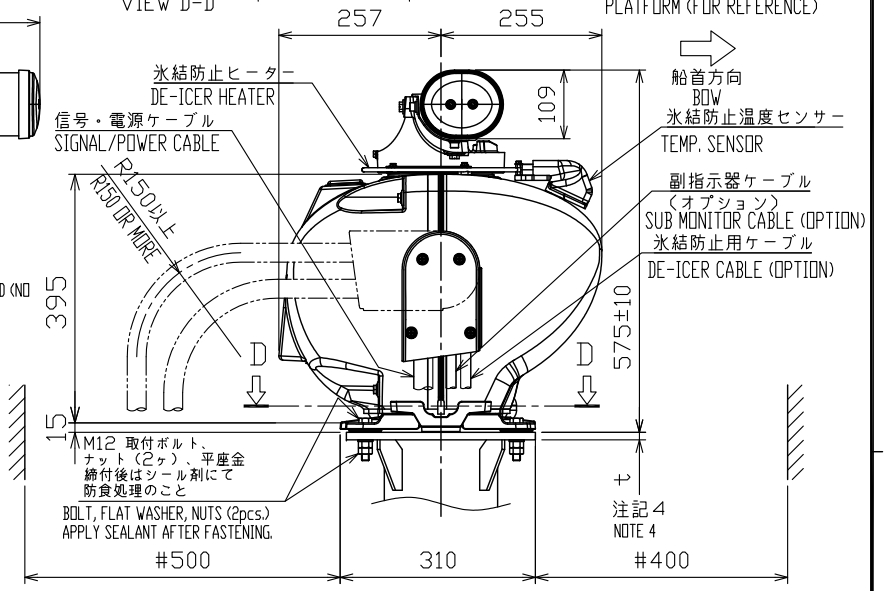

注　記

１）指定外の寸法公差は表１による。
２）＃印寸法は最小サービス空間寸法とする。
３）取付用ネジはＭ１２ボルトを使用のこと。
４）取付台には厚さ（ｔ）１２ｍｍ以上の鋼・鉄板を使用のこと。

NOTE

1. TABLE 1 INDICATES TOLERANCE OF DIMENSIONS WHICH IS NOT SPECIFIED.
2. #: MINIMUM SERVICE CLEARANCE.
3. USE M12 BOLTS FOR FIXING THE UNIT.
4. THICKNESS OF PLATFORM (t): 12 mm OR MORE STEEL PLATE.

DRAWN 16/Oct/2019 T.YAMASAKI		TITLE	RSB-128
CHECKED 16/Oct/2019 H.MAKI		名称	空中線部（PMあり／なし、氷結防止あり）
APPROVED 17/Oct/2019 H.MAKI	FAR-2xx8-NXT		外寸図
SCALE 1/12	MASS 表2参照 SEE TABLE 2	NAME	ANTENNA UNIT (PM Y/N, W/ DE-ICER)
DWG.No. C3679-G02- A	REF.No. 03-199-311G-2		OUTLINE DRAWING

FURUNO ELECTRIC CO., LTD.

FURUNO

表２ TABLE 2

アンテナ型式 ANTENNA TYPE	SN24CF	SN30CF	SN36CF
A：空中線長（mm） ANTENNA LENGTH	2547	3072	3822
B：回転安全空間（mm） ANT. CLEARANCE	2700	3200	3900
質量（kg±10%） MASS	129	135	140

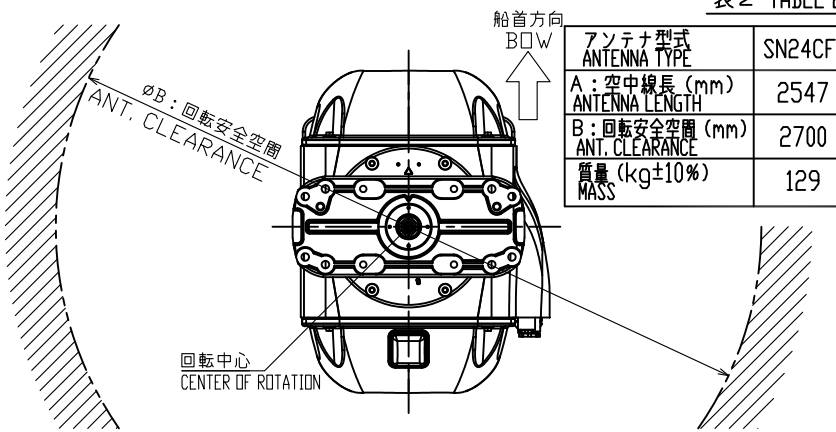

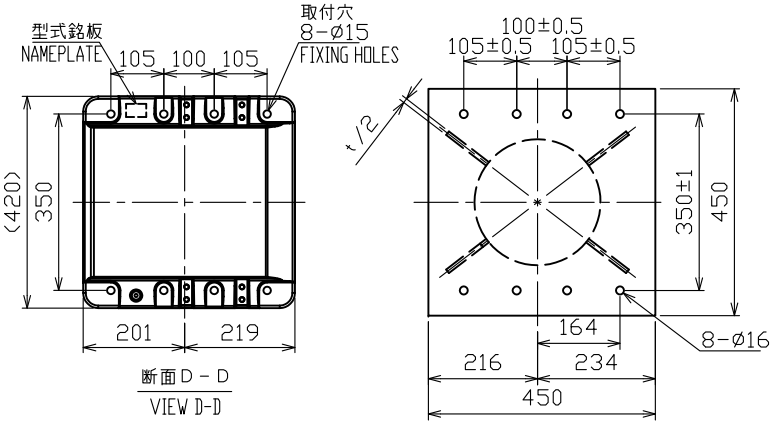

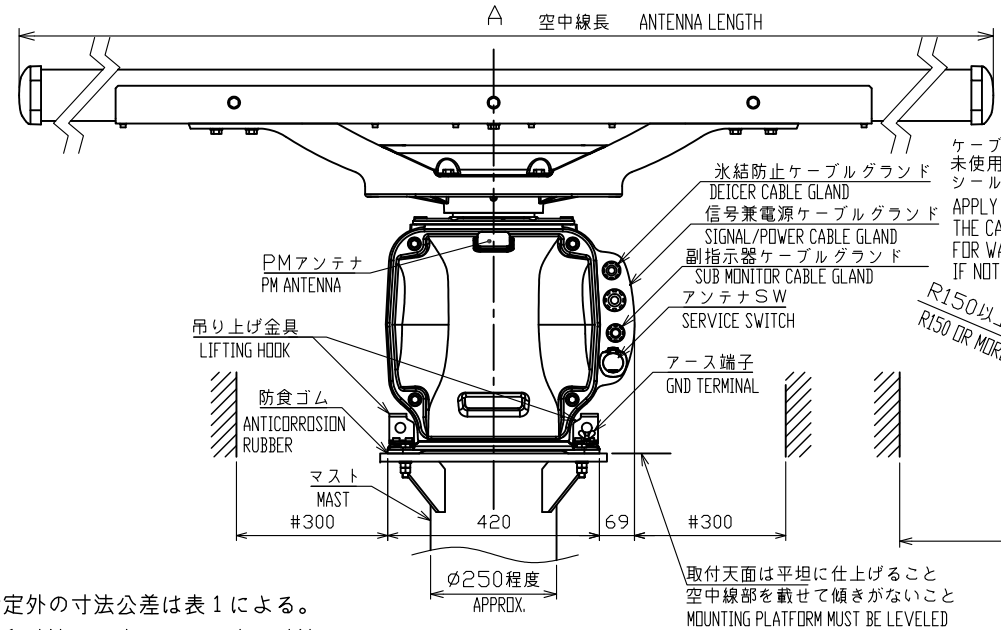

ケーブルグランドは未使用のものも含めシール剤で防水する。
APPLY SEALANT ONTO THE CABLE GLANDS FOR WATER-TIGHTNESS IF NOT USED ALSO.

取付天面は平坦に仕上げること
空中線部を載せて傾きがないこと
MOUNTING PLATFORM MUST BE LEVELED (NO INCLINATION) IN ALL DIRECTIONS.

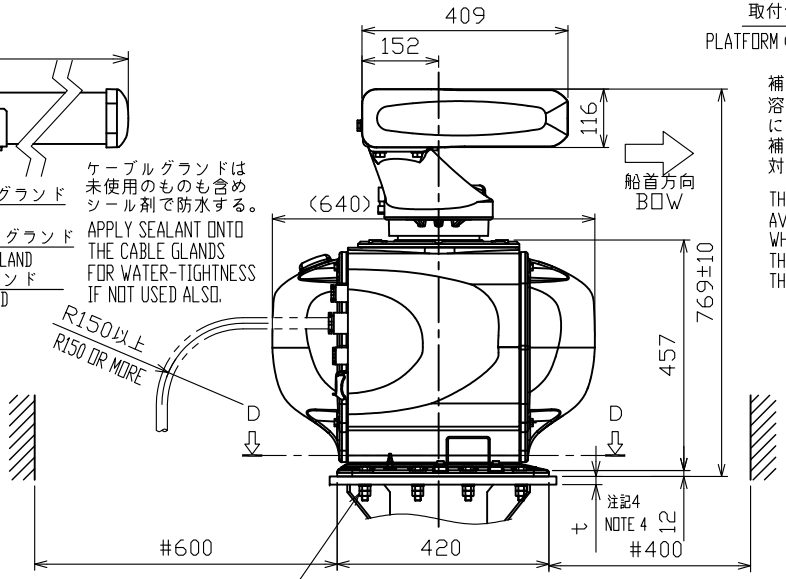

ボルト、平座金、ナット（2個）
締付後、シール剤塗布
BOLT, FLAT WASHER, NUTS (2pcs.)
APPLY SEALANT AFTER FASTENING.

補強リブの板厚は取付台の半分程度。
溶接は、取付用ボルト・平座金の座面にかからぬこと。
補強リブはマスト支柱中心と取付台の対角線方向近傍に取り付けること。

THICKNESS OF RIB: t/2 (HALF OF PLATFORM PLATE)
AVOID BOLT & WASHER LOCATIONS ON THE PLATFORM WHEN WELDING THE RIBS.
THE RIBS SHOULD BE WELDED NEAR THE LINE WITH THE STANCION CENTER AND PLATFORM CORNER.

表1 TABLE 1

寸法区分（mm） DIMENSION	公差（mm） TOLERANCE
L≦50	±1.5
50<L≦100	±2.5
100<L≦500	±3
500<L≦1000	±4
1000<L≦2000	±5
2000<L≦4000	±7

注　記

１）指定外の寸法公差は表１による。
２）＃印寸法は最小サービス空間寸法とする。
３）取付用ネジはＭ１２ボルトを使用のこと。
４）取付台厚さ（ｔ）：１５ｍｍ以上の鋼・鉄板を使用のこと。

NOTE

1. TABLE 1 INDICATES TOLERANCE OF DIMENSIONS WHICH IS NOT SPECIFIED.
2. #: MINIMUM SERVICE CLEARANCE.
3. USE M12 BOLTS FOR FIXING THE UNIT.
4. THICKNESS OF PLATFORM (t): 15 mm OR MORE STEEL PLATE.

DRAWN 6/Dec/2018 T.YAMASAKI		TITLE	RSB-129
CHECKED 6/Dec/2018 H.MAKI		名称	空中線部(PMあり、氷結防止なし)
APPROVED 10/Dec/2018 H.MAKI	FAR-3230S/3330S		外寸図
SCALE 1/15	MASS 表２参照 SEE TABLE 2	NAME	ANTENNA UNIT (W/ PM, W/O DE-ICER)
DWG.No. C3618-G02- H	REF.No. 03-183-310G-6		OUTLINE DRAWING

FURUNO ELECTRIC CO., LTD.

FURUNO

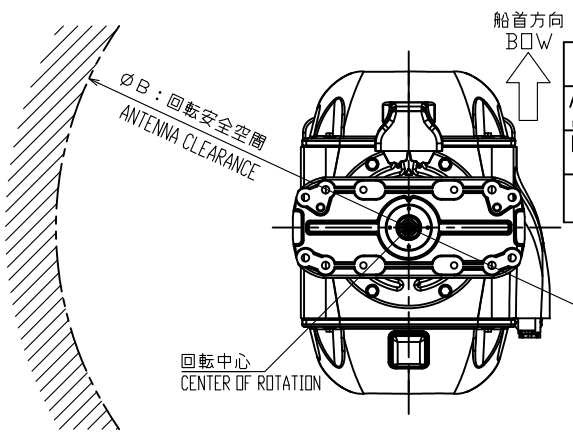

表2 TABLE 2

アンテナ型式 ANTENNA TYPE	SN24CF	SN30CF	SN36CF
A：空中線長 (mm) ANTENNA LENGTH	2547	3072	3822
B：回転安全空間 (mm) ANT. CLEARANCE	2700	3200	3900
質量 (kg±10%) MASS	130	136	141

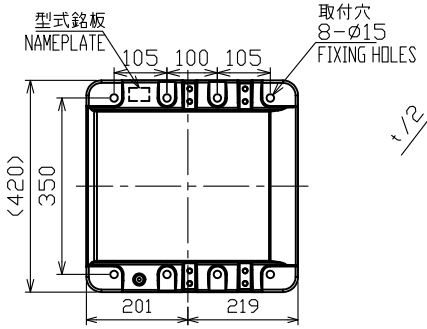

断面D－D
VIEW D-D

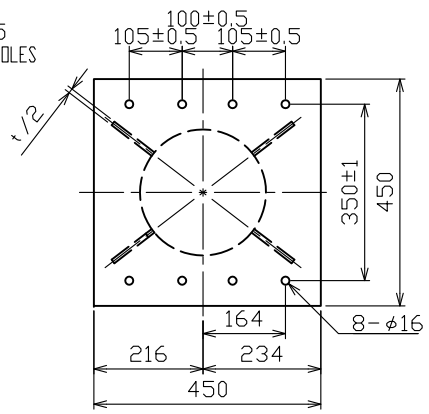

取付台（参考）
PLATFORM (FOR REFERENCE)

補強リブの板厚は取付台の半分程度。
溶接は、取付用ボルト・平座金の座面にかからぬこと。
補強リブはマスト支柱中心と取付台の対角線方向近傍に取り付けること。

THICKNESS OF RIB: t/2 (HALF OF PLATFORM PLATE)
AVOID BOLT & WASHER LOCATIONS ON THE PLATFORM WHEN WELDING THE RIBS.
THE RIBS SHOULD BE WELDED NEAR THE LINE WITH THE STANCION CENTER AND PLATFORM CORNER.

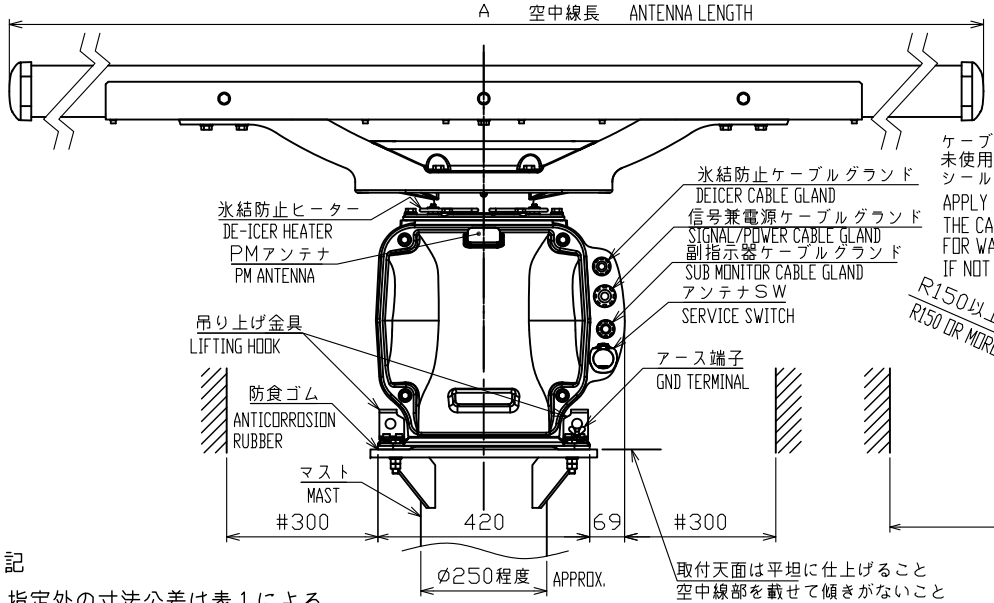

取付天面は平坦に仕上げること
空中線部を載せて傾きがないこと
MOUNTING PLATFORM MUST BE LEVELED (NO INCLINATION) IN ALL DIRECTIONS.

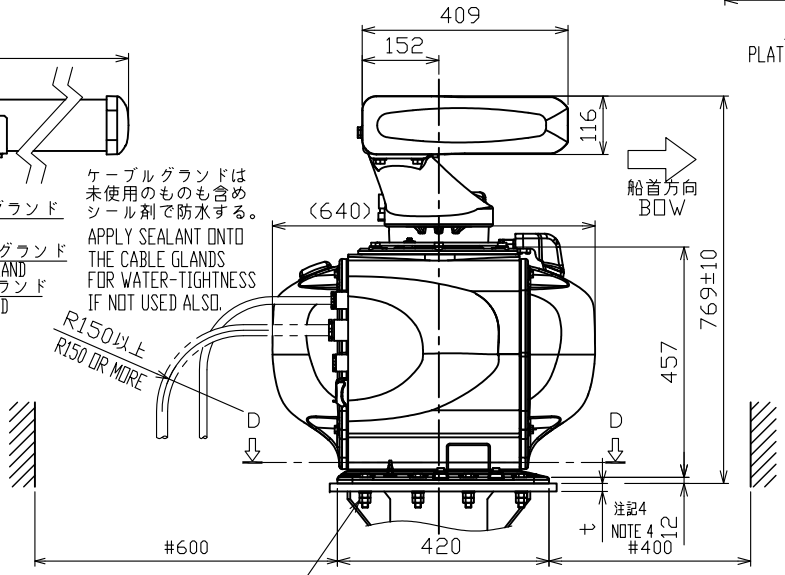

ケーブルグランドは未使用のものも含めシール剤で防水する。
APPLY SEALANT ONTO THE CABLE GLANDS FOR WATER-TIGHTNESS IF NOT USED ALSO.

ボルト、平座金、ナット（2個）締付後、シール剤塗布
BOLT, FLAT WASHER, NUTS (2pcs.) APPLY SEALANT AFTER FASTENING.

表1 TABLE 1

寸法区分 (mm) DIMENSION	公差 (mm) TOLERANCE
L≦50	±1.5
50<L≦100	±2.5
100<L≦500	±3
500<L≦1000	±4
1000<L≦2000	±5
2000<L≦4000	±7

注　記
1）指定外の寸法公差は表1による。
2）#印寸法は最小サービス空間寸法とする。
3）取付用ネジはM12ボルトを使用のこと。
4）取付台厚さ（t）：15mm以上の鋼・鉄板を使用のこと。

NOTE
1. TABLE 1 INDICATES TOLERANCE OF DIMENSIONS WHICH IS NOT SPECIFIED.
2. #: MINIMUM SERVICE CLEARANCE.
3. USE M12 BOLTS FOR FIXING THE UNIT.
4. THICKNESS OF PLATFORM (t): 15 mm OR MORE STEEL PLATE.

DRAWN 6/Dec/2018 T.YAMASAKI		TITLE	RSB-129
CHECKED 6/Dec/2018 H.MAKI		名称	空中線部（PMあり、氷結防止あり）
APPROVED 10/Dec/2018 H.MAKI	FAR-3230S/3330S		外寸図
SCALE 1/15	MASS 表2参照 SEE TABLE 2	NAME	ANTENNA UNIT (W/ PM, W/ DE-ICER)
DWG.No. C3618-G03-E	REF.No. 03-183-320G-5		OUTLINE DRAWING

FURUNO ELECTRIC CO., LTD.

FURUNO

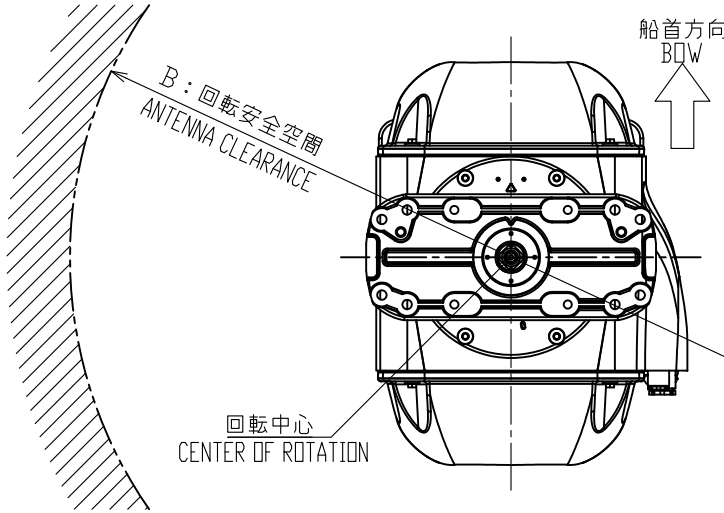

表2 TABLE 2

アンテナ型式 ANTENNA TYPE	SN24CF	SN30CF	SN36CF
A:空中線長（mm） ANTENNA LENGTH	2547	3072	3822
B:回転安全空間（mm） ANTENNA CLEARANCE	2700	3200	3900
質量(±10%) TOTAL MASS	129kg	135kg	140kg

補強リブの板厚は取付台の半分程度。
溶接は、取付用ボルト・平座金の座面にかからぬこと。
THICKNESS OF RIB: t/2 (HALF OF PLATFORM PLATE)
AVOID BOLT & WASHER LOCATIONS ON THE PLATFORM WHEN WELDING THE RIBS.

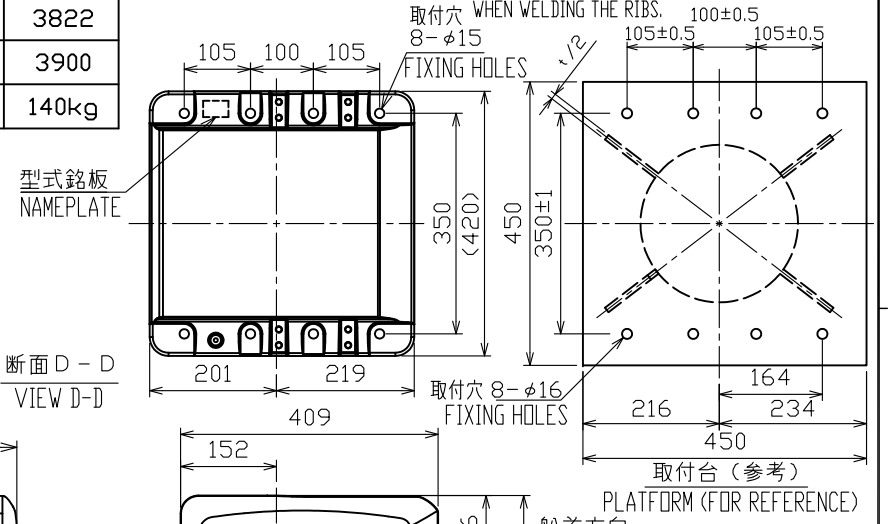

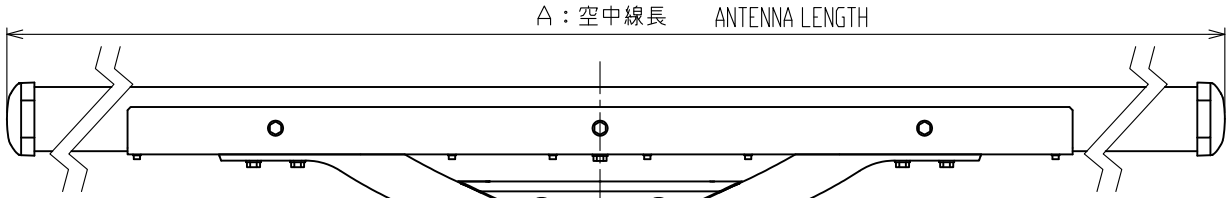

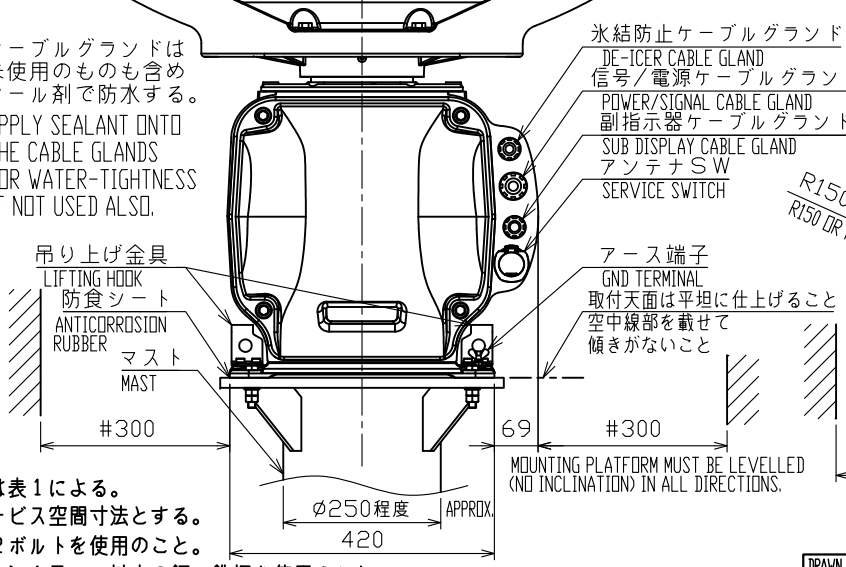

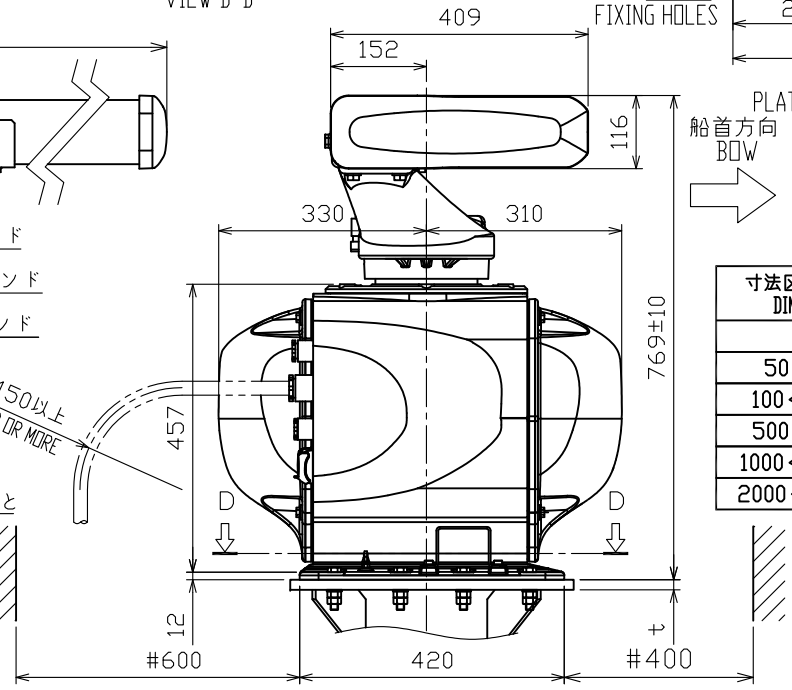

表1 TABLE 1

寸法区分（mm） DIMENSION	公差（mm） TOLERANCE
L≦50	±1.5
50<L≦100	±2.5
100<L≦500	±3
500<L≦1000	±4
1000<L≦2000	±5
2000<L≦4000	±10

注　記
1）指定外の寸法公差は表１による。
2）＃印寸法は最小サービス空間寸法とする。
3）取付用ネジはＭ１２ボルトを使用のこと。
4）取付台には厚さ（ｔ）１５ｍｍ以上の鋼・鉄板を使用のこと。

NOTE
1. TABLE 1 INDICATES TOLERANCE OF DIMENSIONS WHICH IS NOT SPECIFIED.
2. #: MINIMUM SERVICE CLEARANCE.
3. USE M12 BOLTS FOR FIXING THE UNIT.
4. THICKNESS OF PLATFORM (t): 15 mm OR MORE STEEL PLATE.

DRAWN 6/Dec/2018 T.YAMASAKI		TITLE	RSB-129
CHECKED 6/Dec/2018 H.MAKI		名称	空中線部(PMなし、氷結防止なし)
APPROVED 10/Dec/2018 H.MAKI	FAR-2238S ser.		外寸図
SCALE 1/12	MASS 表2参照 SEE TABLE 2	NAME	ANTENNA UNIT (W/O PM, W/O DE-ICER)
DWG.No. C3656-G01- B	REF.No. 03-183-311G-0		OUTLINE DRAWING

FURUNO ELECTRIC CO., LTD.

FURUNO

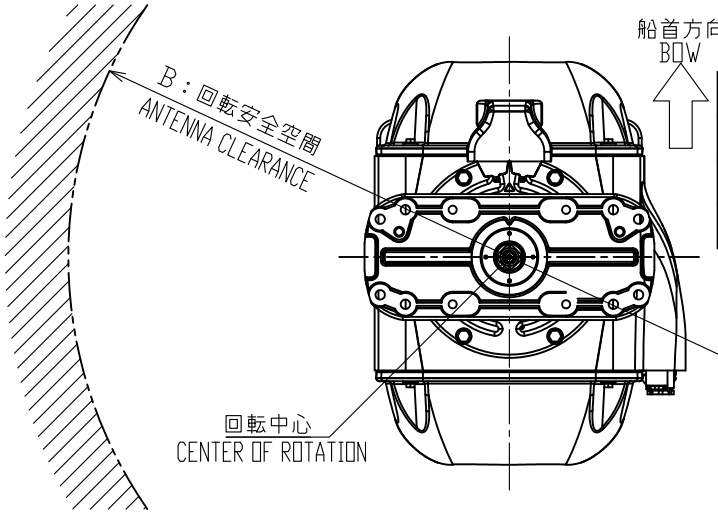

表2 TABLE 2

アンテナ型式 ANTENNA TYPE	SN24CF	SN30CF	SN36CF
A:空中線長 (mm) ANTENNA LENGTH	2547	3072	3822
B:回転安全空間 (mm) ANTENNA CLEARANCE	2700	3200	3900
質量(±10%) TOTAL MASS	129kg	135kg	140kg

補強リブの板厚は取付台の半分程度。
溶接は、取付用ボルト・平座金の座面
にかからぬこと。
THICKNESS OF RIB: t/2 (HALF OF PLATFORM PLATE)
AVOID BOLT & WASHER LOCATIONS ON THE PLATFORM
WHEN WELDING THE RIBS.

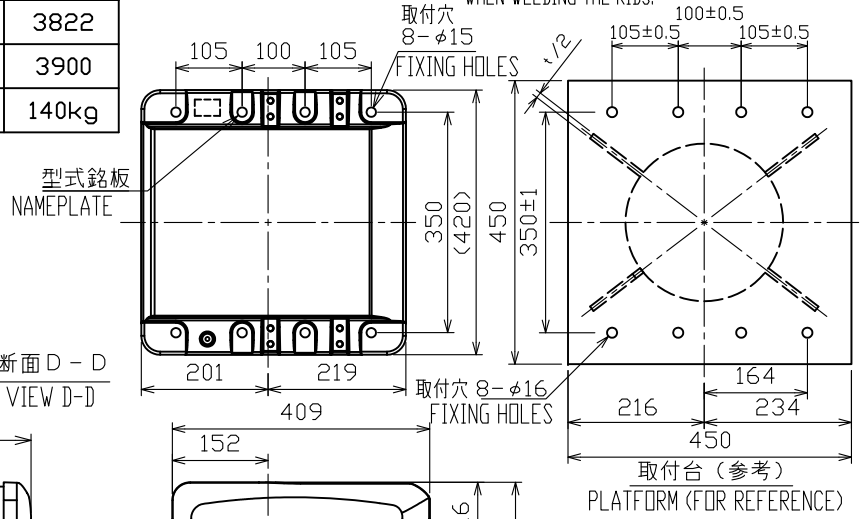

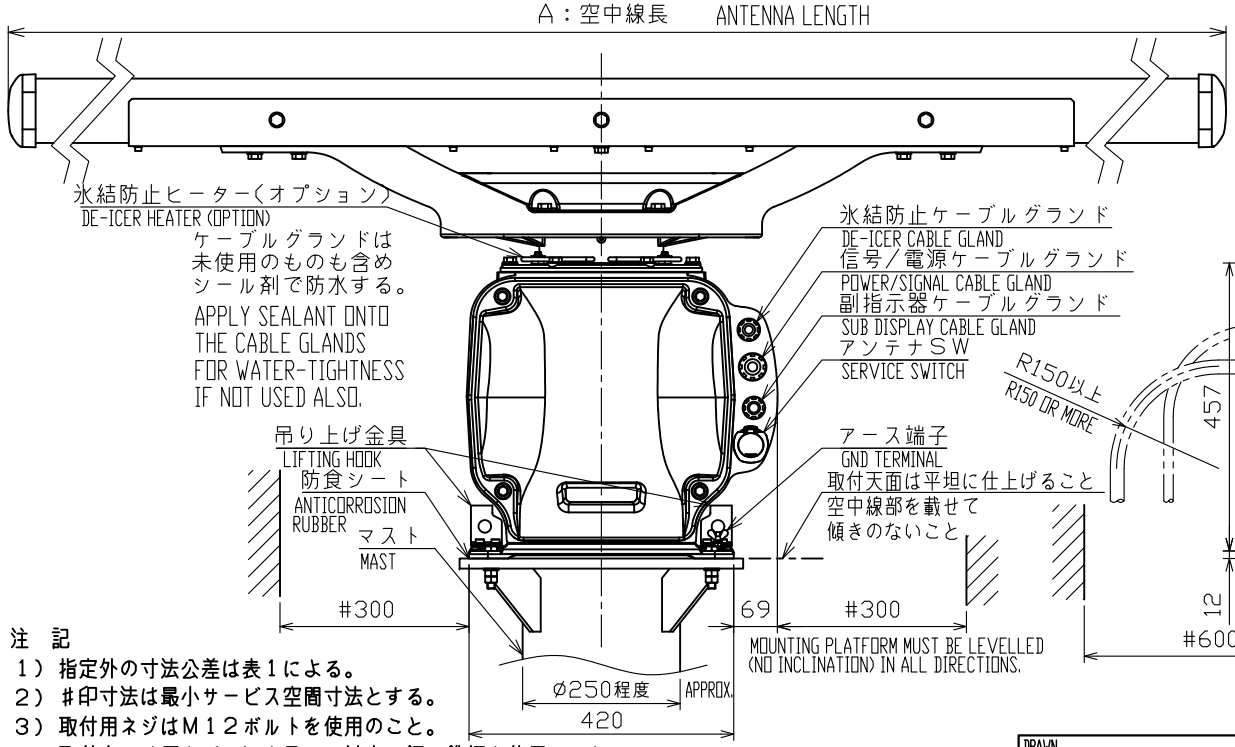

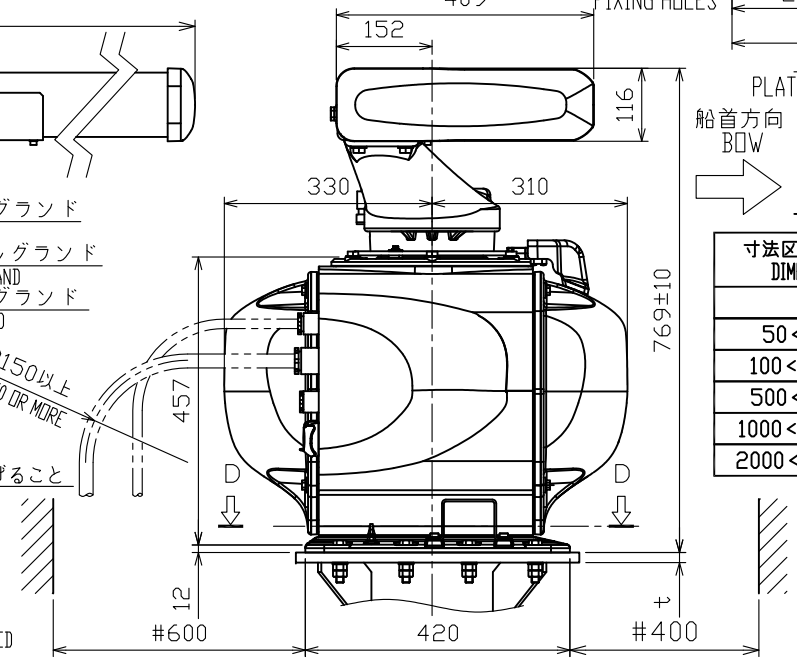

表1 TABLE 1

寸法区分 (mm) DIMENSION	公差 (mm) TOLERANCE
L≦50	±1.5
50<L≦100	±2.5
100<L≦500	±3
500<L≦1000	±4
1000<L≦2000	±5
2000<L≦4000	±10

注　記

1）指定外の寸法公差は表１による。
2）＃印寸法は最小サービス空間寸法とする。
3）取付用ネジはＭ１２ボルトを使用のこと。
4）取付台には厚さ（ｔ）１５ｍｍ以上の鋼・鉄板を使用のこと。

NOTE

1. TABLE 1 INDICATES TOLERANCE OF DIMENSIONS WHICH IS NOT SPECIFIED.
2. #: MINIMUM SERVICE CLEARANCE.
3. USE M12 BOLTS FOR FIXING THE UNIT.
4. THICKNESS OF PLATFORM (t): 15 mm OR MORE STEEL PLATE.

DRAWN 6/Dec/2018 T.YAMASAKI			TITLE RSB-129
CHECKED 6/Dec/2018 H.MAKI			名称 空中線部(PMなし、氷結防止あり)
APPROVED 10/Dec/2018 H.MAKI	FAR-2238S ser.		外寸図
SCALE 1/12	MASS 表2参照 SEE TABLE 2		NAME ANTENNA UNIT (W/O PM, W/DE-ICER)
DWG. No. C3656-G02- C	REF. No. 03-183-321G-0		OUTLINE DRAWING

FURUNO ELECTRIC CO., LTD.

FURUNO

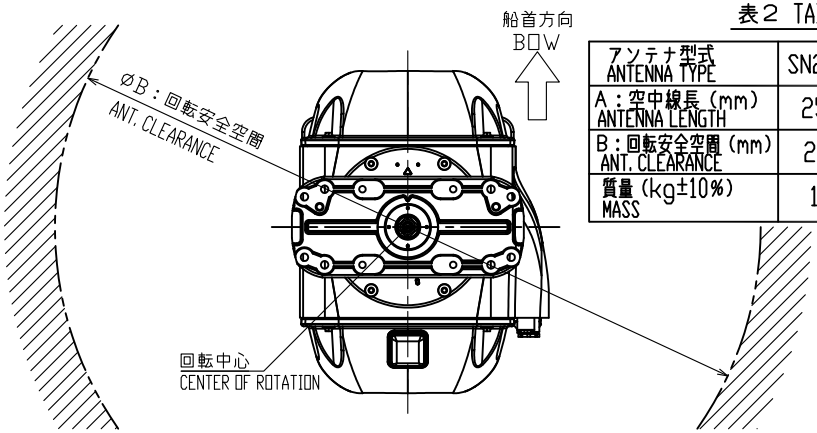

表２ TABLE 2

アンテナ型式 ANTENNA TYPE	SN24CF	SN30CF	SN36CF
A：空中線長（mm） ANTENNA LENGTH	2547	3072	3822
B：回転安全空間（mm） ANT. CLEARANCE	2700	3200	3900
質量（kg±10%） MASS	123	129	134

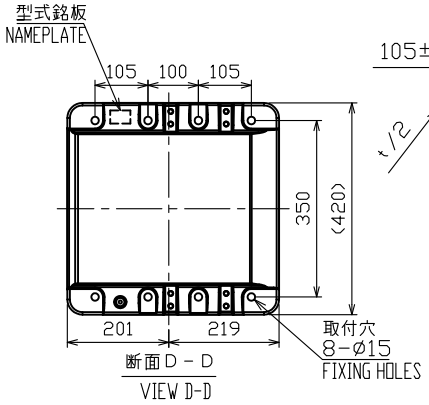

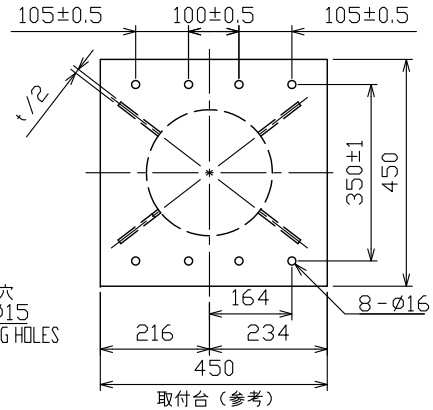

取付台（参考）
PLATFORM (FOR REFERENCE)

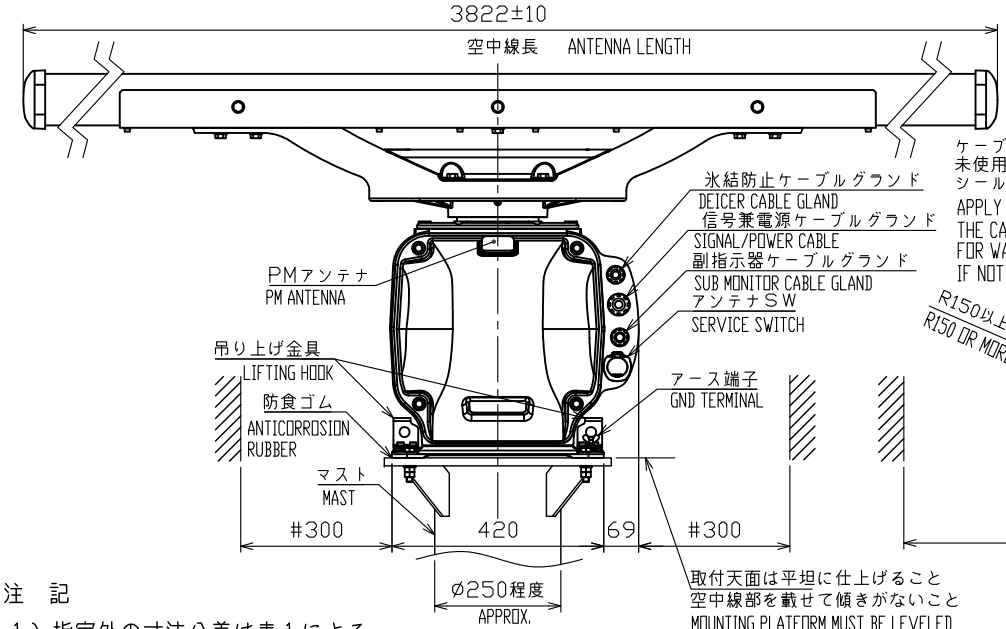

ケーブルグランドは未使用のものも含めシール剤で防水する。
APPLY SEALANT ONTO THE CABLE GLANDS FOR WATER-TIGHTNESS IF NOT USED ALSO.

取付天面は平坦に仕上げること
空中線部を載せて傾きがないこと
MOUNTING PLATFORM MUST BE LEVELED (NO INCLINATION) IN ALL DIRECTIONS.

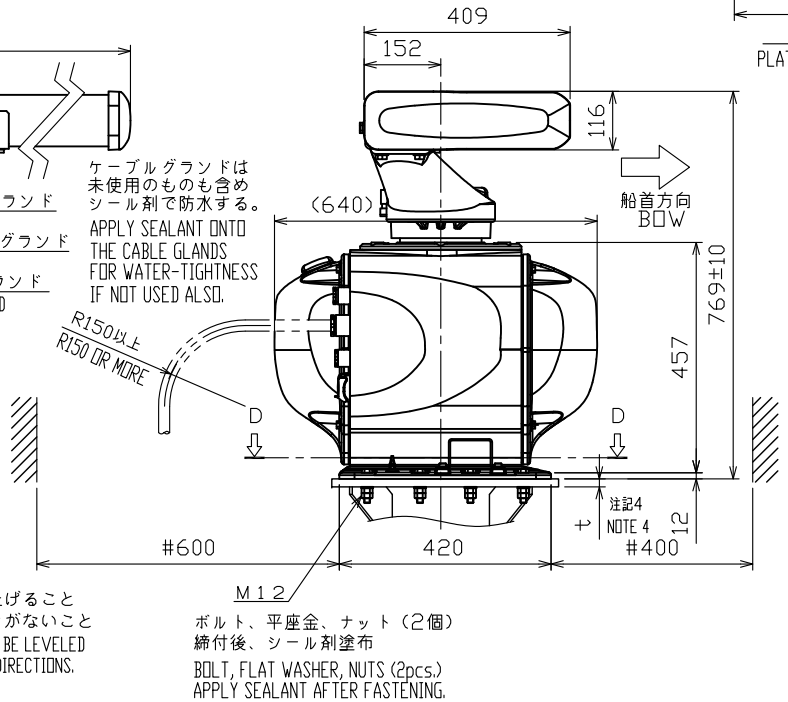

ボルト、平座金、ナット（2個）
締付後、シール剤塗布
BOLT, FLAT WASHER, NUTS (2pcs.)
APPLY SEALANT AFTER FASTENING.

補強リブの板厚は取付台の半分程度。
溶接は、取付用ボルト・平座金の座面にかからぬこと。
補強リブはマスト支柱中心と取付台の対角線方向近傍に取り付けること。

THICKNESS OF RIB: t/2 (HALF OF PLATFORM PLATE)
AVOID BOLT & WASHER LOCATIONS ON THE PLATFORM WHEN WELDING THE RIBS.
THE RIBS SHOULD BE WELDED NEAR THE LINE WITH THE STANCION CENTER AND PLATFORM CORNER.

表1 TABLE 1

寸法区分（mm） DIMENSION	公差（mm） TOLERANCE
L≦50	±1.5
50<L≦100	±2.5
100<L≦500	±3
500<L≦1000	±4
1000<L≦2000	±5
2000<L≦4000	±7

注　記
１）指定外の寸法公差は表１による。
２）＃印寸法は最小サービス空間寸法とする。
３）取付用ネジはＭ１２ボルトを使用のこと。
４）取付台厚さ（ｔ）：１５ｍｍ以上の鋼・鉄板を使用のこと。

NOTE
1. TABLE 1 INDICATES TOLERANCE OF DIMENSIONS WHICH IS NOT SPECIFIED.
2. #: MINIMUM SERVICE CLEARANCE.
3. USE M12 BOLTS FOR FIXING THE UNIT.
4. THICKNESS OF PLATFORM (t): 15 mm OR MORE STEEL PLATE.

DRAWN 6/Dec/2018 T.YAMASAKI		TITLE RSB-133
CHECKED 6/Dec/2018 H.MAKI		名称 空中線部（PMあり、氷結防止なし）
APPROVED 10/Dec/2018 H.MAKI	FAR-3230S/3330S-SSD	外寸図
SCALE 1/15	MASS 表２参照 SEE TABLE 2	NAME ANTENNA UNIT (W/PM, W/O DE-ICER)
DWG.No. C3623-G01- J	REF.No. 03-183-350G-9	OUTLINE DRAWING

FURUNO ELECTRIC CO., LTD.

FURUNO

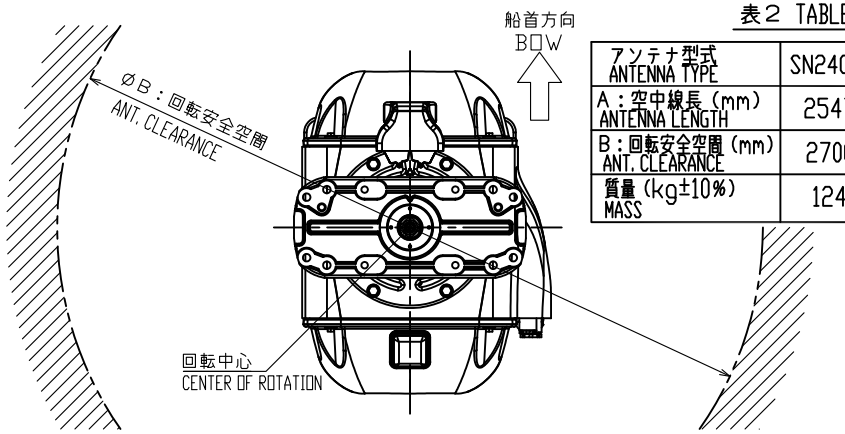

表２ TABLE 2

アンテナ型式 ANTENNA TYPE	SN24CF	SN30CF	SN36CF
A：空中線長（mm） ANTENNA LENGTH	2547	3072	3822
B：回転安全空間（mm） ANT. CLEARANCE	2700	3200	3900
質量（kg±10%） MASS	124	130	135

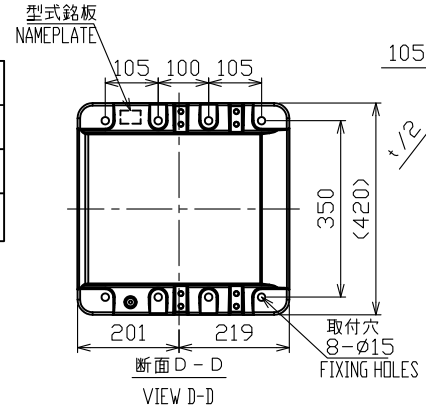

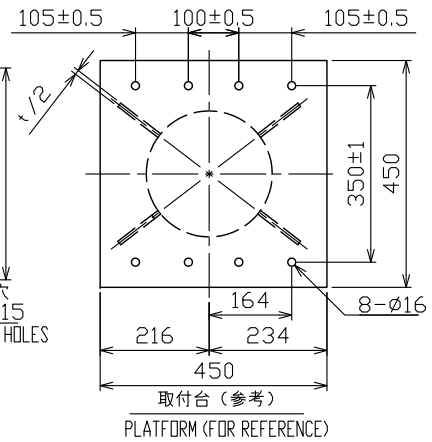

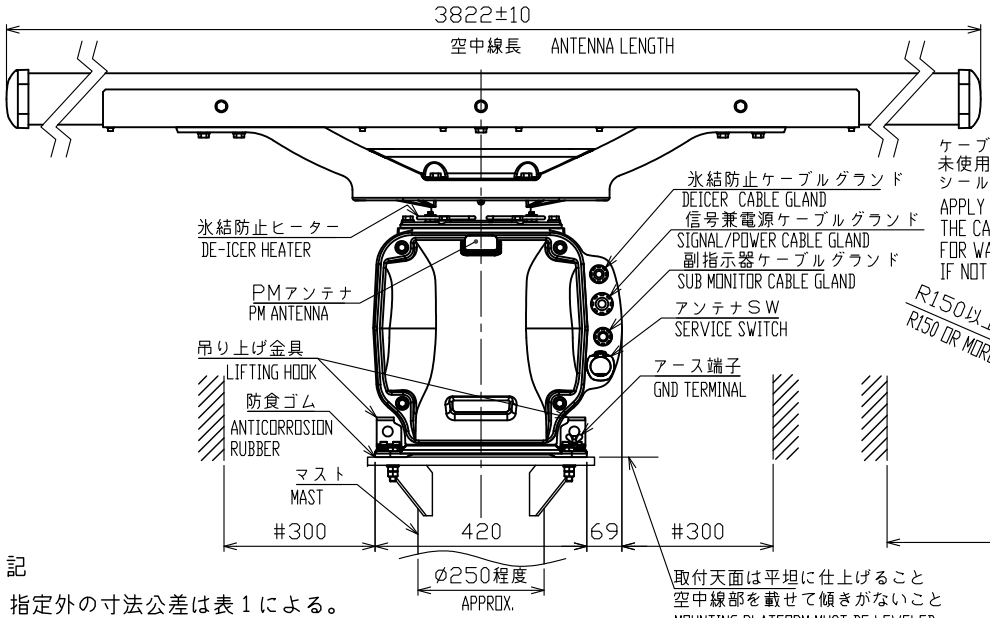

取付天面は平坦に仕上げること
空中線部を載せて傾きがないこと
MOUNTING PLATFORM MUST BE LEVELED (NO INCLINATION) IN ALL DIRECTIONS.

ケーブルグランドは未使用のものも含めシール剤で防水する。
APPLY SEALANT ONTO THE CABLE GLANDS FOR WATER-TIGHTNESS IF NOT USED ALSO.

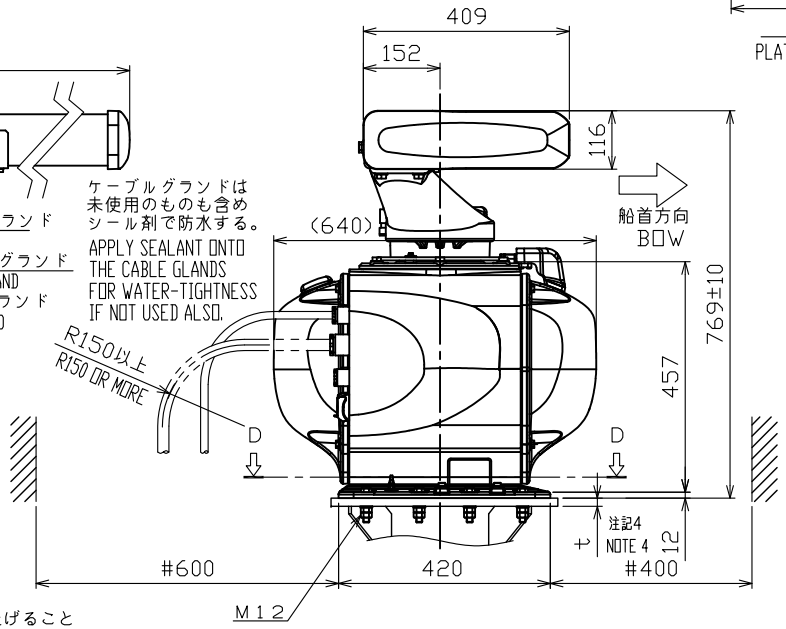

ボルト、平座金、ナット（2個）締付後、シール剤塗布
BOLT, FLAT WASHER, NUTS (2pcs.) APPLY SEALANT AFTER FASTENING.

補強リブの板厚は取付台の半分程度。
溶接は、取付用ボルト・平座金の座面にかからぬこと。
補強リブはマスト支柱中心と取付台の対角線方向近傍に取り付けること。

THICKNESS OF RIB: t/2 (HALF OF PLATFORM PLATE)
AVOID BOLT & WASHER LOCATIONS ON THE PLATFORM WHEN WELDING THE RIBS.
THE RIBS SHOULD BE WELDED NEAR THE LINE WITH THE STANCION CENTER AND PLATFORM CORNER.

表1 TABLE 1

寸法区分（mm） DIMENSION	公差（mm） TOLERANCE
L≦50	±1.5
50<L≦100	±2.5
100<L≦500	±3
500<L≦1000	±4
1000<L≦2000	±5
2000<L≦4000	±7

注　記

１）指定外の寸法公差は表１による。
２）＃印寸法は最小サービス空間寸法とする。
３）取付用ネジはＭ１２ボルトを使用のこと。
４）取付台厚さ（ｔ）：１５ｍｍ以上の鋼・鉄板を使用のこと。

NOTE

1. TABLE 1 INDICATES TOLERANCE OF DIMENSIONS WHICH IS NOT SPECIFIED.
2. #: MINIMUM SERVICE CLEARANCE.
3. USE M12 BOLTS FOR FIXING THE UNIT.
4. THICKNESS OF PLATFORM (t): 15 mm OR MORE STEEL PLATE.

DRAWN 6/Dec/2018 T.YAMASAKI		TITLE	RSB-133
CHECKED 6/Dec/2018 H.MAKI		名称	空中線部（PMあり、氷結防止あり）
APPROVED 11/Dec/2018 H.MAKI	FAR-3230S/3330S-SSD		外寸図
SCALE 1/15	MASS 表２参照 SEE TABLE 2	NAME	ANTENNA UNIT (W/PM, W/ DE-ICER)
DWG.No. C3623-G02- D	REF.No. 03-183-360G-6		OUTLINE DRAWING

FURUNO ELECTRIC CO., LTD.

FURUNO

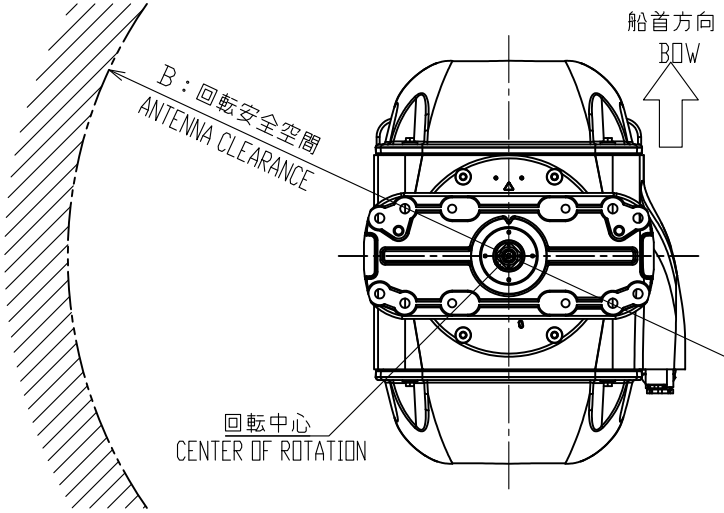

表2 TABLE 2

アンテナ型式 ANTENNA TYPE	SN24CF	SN30CF	SN36CF
A:空中線長（mm） ANTENNA LENGTH	2547	3072	3822
B:回転安全空間（mm） ANTENNA CLEARANCE	2700	3200	3900
質量(±10%) TOTAL MASS	123kg	129kg	134kg

補強リブの板厚は取付台の半分程度。
溶接は、取付用ボルト・平座金の座面にかからぬこと。
THICKNESS OF RIB: t/2 (HALF OF PLATFORM PLATE)
AVOID BOLT & WASHER LOCATIONS ON THE PLATFORM WHEN WELDING THE RIBS.

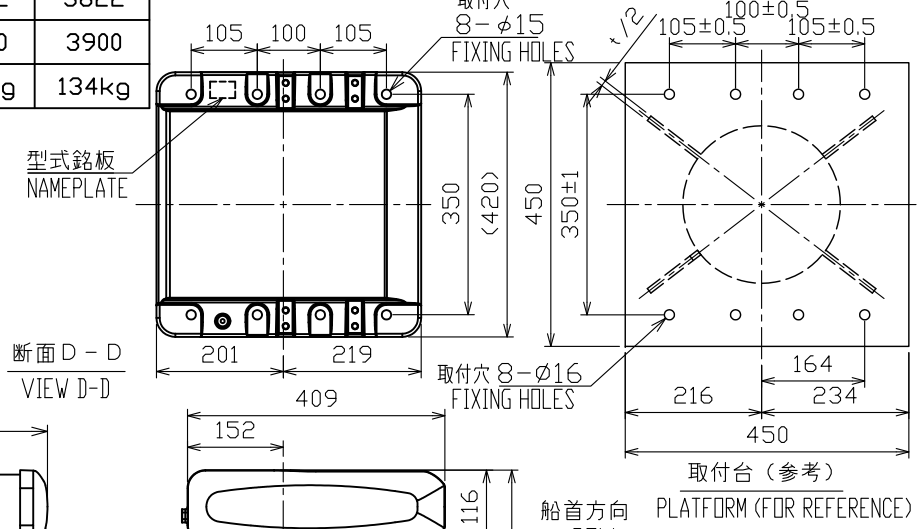

断面D－D
VIEW D-D

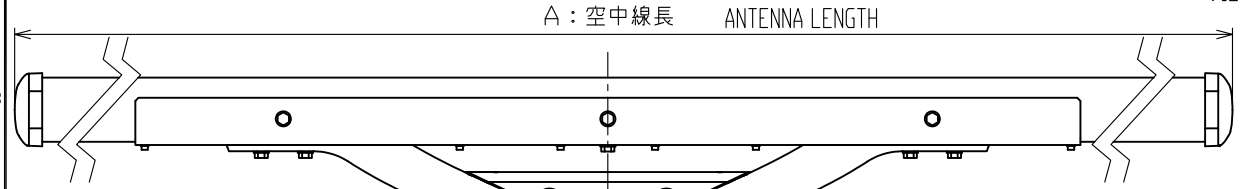

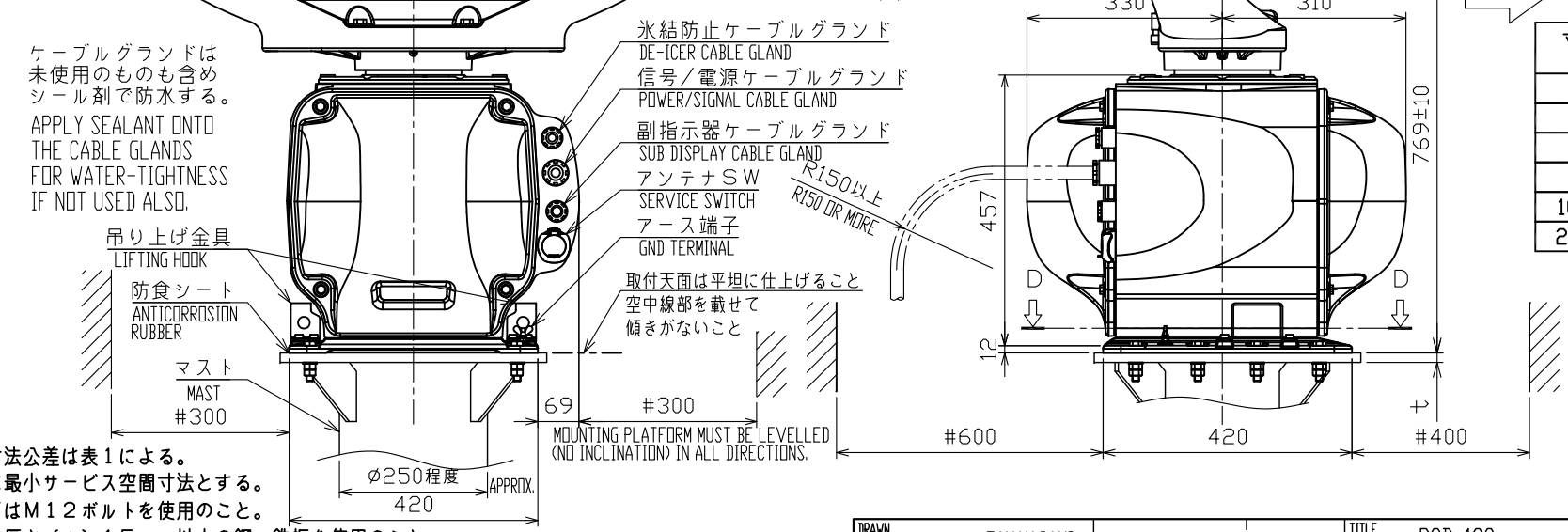

表1 TABLE 1

寸法区分（mm） DIMENSION	公差（mm） TOLERANCE
L≦50	±1.5
50<L≦100	±2.5
100<L≦500	±3
500<L≦1000	±4
1000<L≦2000	±5
2000<L≦4000	±10

注　記
1）指定外の寸法公差は表１による。
2）＃印寸法は最小サービス空間寸法とする。
3）取付用ネジはＭ１２ボルトを使用のこと。
4）取付台には厚さ（ｔ）１５ｍｍ以上の鋼・鉄板を使用のこと。

NOTE
1. TABLE 1 INDICATES TOLERANCE OF DIMENSIONS WHICH IS NOT SPECIFIED.
2. #: MINIMUM SERVICE CLEARANCE.
3. USE M12 BOLTS FOR FIXING THE UNIT.
4. THICKNESS OF PLATFORM (t): 15 mm OR MORE STEEL PLATE.

DRAWN 6/Dec/2018 T.YAMASAKI		TITLE	RSB-133
CHECKED 6/Dec/2018 H.MAKI		名称	空中線部(PMなし、氷結防止なし)
APPROVED 10/Dec/2018 H.MAKI	FAR-2338S-NXT ser.		外寸図
SCALE 1/12	MASS 表2参照 SEE TABLE 2	NAME	ANTENNA UNIT (W/O PM, W/O DE-ICER)
DWG.No. C3665-G01- B	REF.No. 03-183-351G-0		OUTLINE DRAWING

FURUNO ELECTRIC CO., LTD.

FURUNO

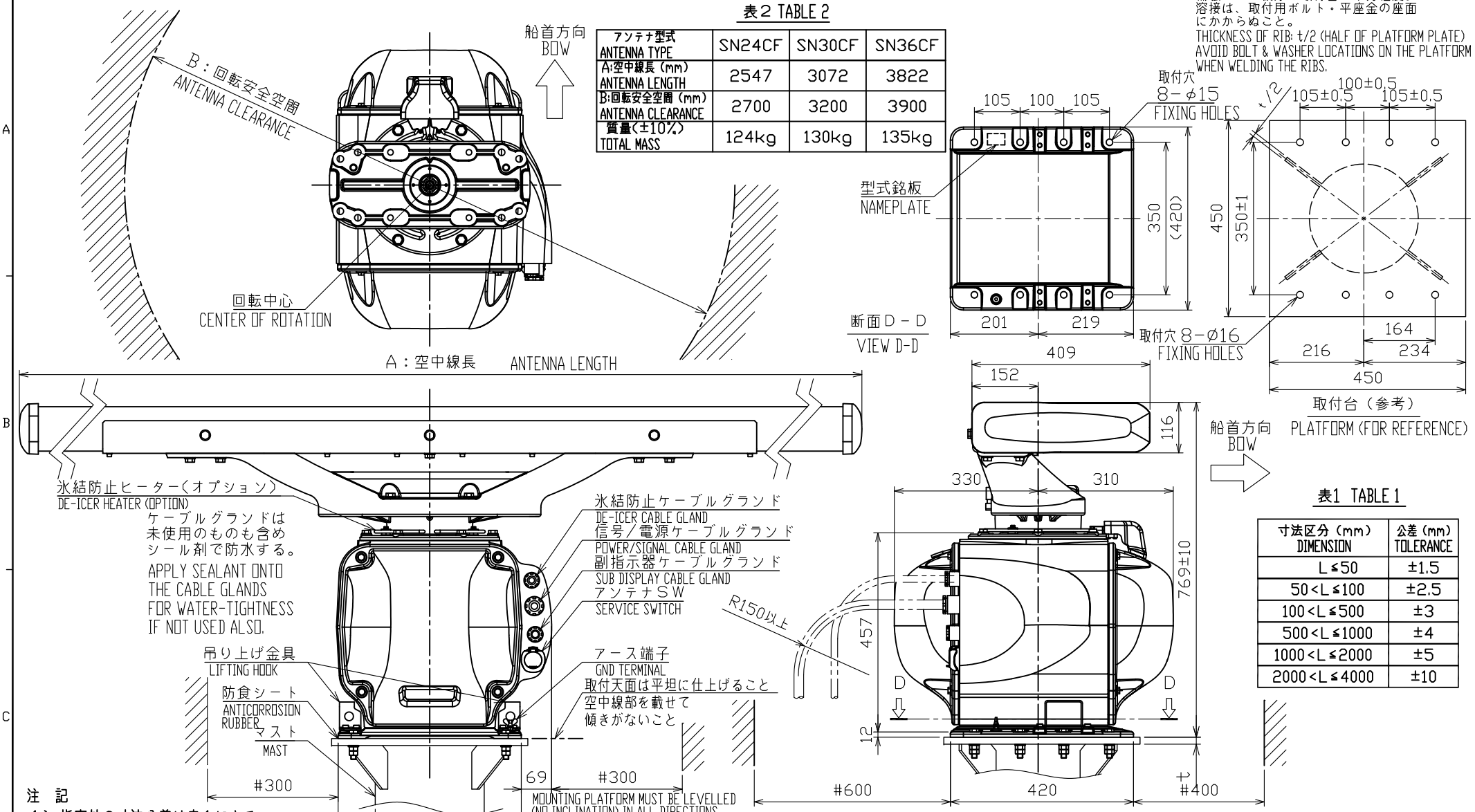

表2 TABLE 2

アンテナ型式 ANTENNA TYPE	SN24CF	SN30CF	SN36CF
A:空中線長 (mm) ANTENNA LENGTH	2547	3072	3822
B:回転安全空間 (mm) ANTENNA CLEARANCE	2700	3200	3900
質量(±10%) TOTAL MASS	124kg	130kg	135kg

表1 TABLE 1

寸法区分 (mm) DIMENSION	公差 (mm) TOLERANCE
L≦50	±1.5
50<L≦100	±2.5
100<L≦500	±3
500<L≦1000	±4
1000<L≦2000	±5
2000<L≦4000	±10

注　記

1）指定外の寸法公差は表１による。
2）＃印寸法は最小サービス空間寸法とする。
3）取付用ネジはＭ１２ボルトを使用のこと。
4）取付台には厚さ（ｔ）１５ｍｍ以上の鋼・鉄板を使用のこと。

NOTE

1. TABLE 1 INDICATES TOLERANCE OF DIMENSIONS WHICH IS NOT SPECIFIED.
2. #: MINIMUM SERVICE CLEARANCE.
3. USE M12 BOLTS FOR FIXING THE UNIT.
4. THICKNESS OF PLATFORM (t): 15 mm OR MORE STEEL PLATE.

DRAWN 6/Dec/2018 T.YAMASAKI		TITLE	RSB-133
CHECKED 6/Dec/2018 H.MAKI		名称	空中線部(PMなし、氷結防止あり)
APPROVED 10/Dec/2018 H.MAKI	FAR-2338S-NXT ser.		外寸図
SCALE 1/12	MASS 表2参照 SEE TABLE 2	NAME	ANTENNA UNIT (W/O PM, W/DE-ICER)
DWG.No. C3665-G02- B	REF.No. 03-183-361G-0		OUTLINE DRAWING

FURUNO ELECTRIC CO., LTD.

FURUNO

表１ TABLE 1

寸法区分（mm） DIMENSION	公差（mm） TOLERANCE
L≦50	±1.5
50<L≦100	±2.5
100<L≦500	±3
500<L≦1000	±4
1000<L≦2000	±5
2000<L≦4000	±7

表２ TABLE 2

アンテナ型式 ANTENNA TYPE	XN20CF (200cm型)	XN24CF (240cm型)
A：空中線長 ANTENNA LENGTH	2,100±10mm	2,600±10mm
B：回転安全空間 ANTENNA CLEARANCE	2,300mm	2,800mm
総質量（±10%） TOTAL MASS	43.8kg	45.0kg

補強リブの板厚は取付台の半分程度。
溶接は、取付用ボルト・平座金の座面にかからぬこと。
補強リブはマスト支柱中心と取付穴の中心を結ぶ方向に取り付けること。

THICKNESS OF RIB: t/2 (HALF OF PLATFORM PLATE)
AVOID BOLT & WASHER LOCATIONS ON THE PLATFORM WHEN WELDING THE RIBS.
THE RIBS SHOULD BE WELDED IN THE LINE WITH THE STANCHION CENTER AND FIXING HOLES CENTER.

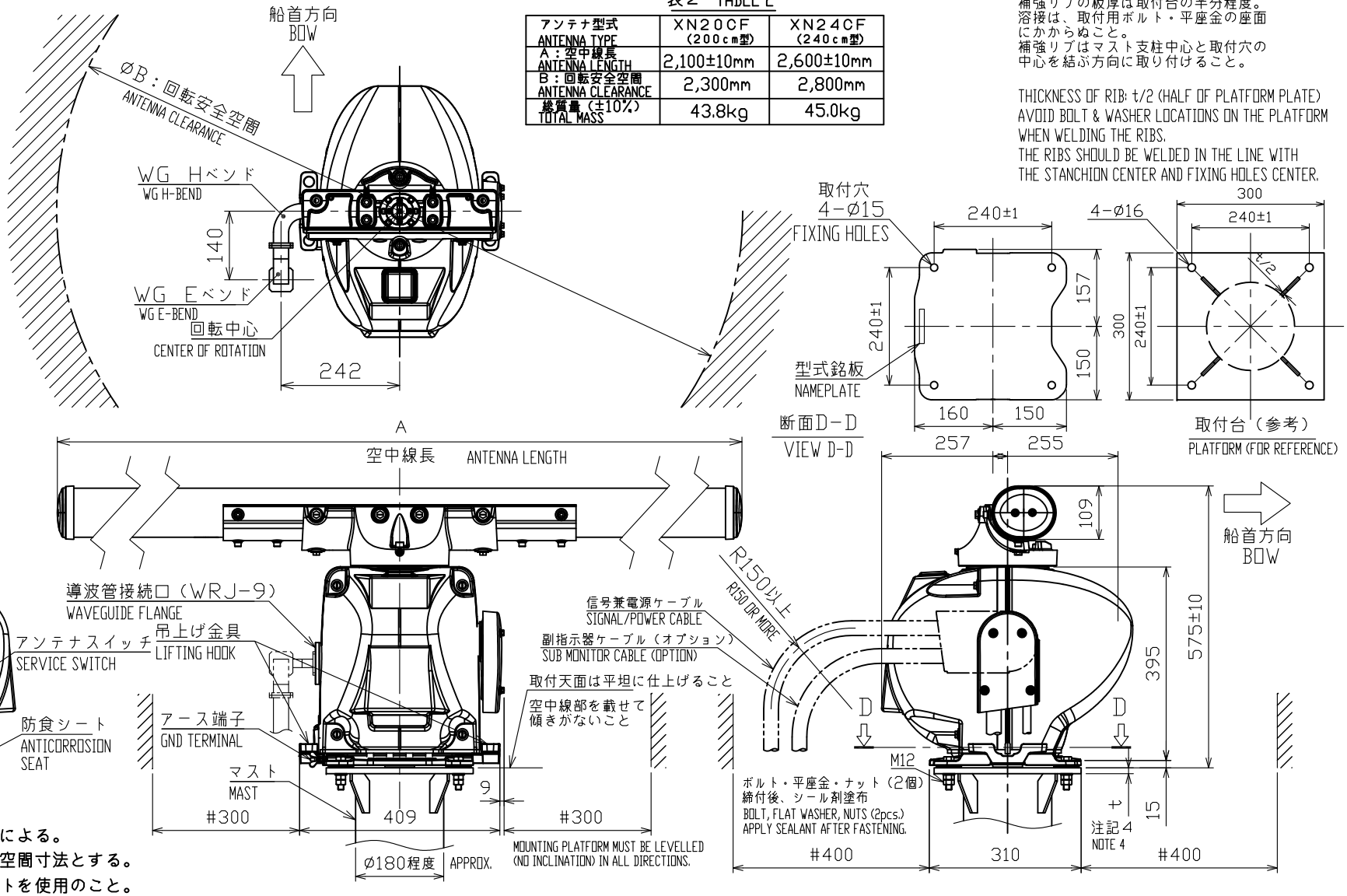

注　記
１）指定外の寸法公差は表１による。
２）＃印寸法は最小サービス空間寸法とする。
３）取付用ネジはＭ１２ボルトを使用のこと。
４）取付台は厚さ（t）12mm以上の鋼・鉄板を使用のこと。

NOTE
1. TABLE 1 INDICATES TOLERANCE OF DIMENSIONS WHICH IS NOT SPECIFIED.
2. #: MINIMUM SERVICE CLEARANCE.
3. USE M12 BOLTS FOR FIXING THE UNIT.
4. THICKNESS OF PLATFORM (t): 12 mm OR MORE STEEL PLATE.

DRAWN 6/Nov/2017 T.YAMASAKI		TITLE	RSB-130
CHECKED 6/Nov/2017 H.MAKI		名称	空中線部
APPROVED 6/Nov/2017 H.MAKI	FAR-3220W/3220W-BB		外寸図
SCALE 1/12	MASS 表2参照 SEE TABLE 2	NAME	ANTENNA UNIT
DWG.No. C3624-G03- G	REF.No. 03-182-330G-5		OUTLINE DRAWING

FURUNO ELECTRIC CO., LTD.

FURUNO

表１ TABLE 1

寸法区分（mm） DIMENSION	公差（mm） TOLERANCE
L≦50	±1.5
50<L≦100	±2.5
100<L≦500	±3
500<L≦1000	±4
1000<L≦2000	±5
2000<L≦4000	±7

表２ TABLE 2

アンテナ型式 ANTENNA TYPE	XN20CF (200cm型)	XN24CF (240cm型)
A：空中線長 ANTENNA LENGTH	2,100±10mm	2,600±10mm
B：回転安全空間 ANTENNA CLEARANCE	2,300mm	2,800mm
総質量（±10%） TOTAL MASS	43.8kg	45.0kg

補強リブの板厚は取付台の半分程度。
溶接は、取付用ボルト・平座金の座面にかからぬこと。
補強リブはマスト支柱中心と取付穴の中心を結ぶ方向に取り付けること。

THICKNESS OF RIB: t/2 (HALF OF PLATFORM PLATE)
AVOID BOLT & WASHER LOCATIONS ON THE PLATFORM WHEN WELDING THE RIBS.
THE RIBS SHOULD BE WELDED IN THE LINE WITH THE STANCHION CENTER AND FIXING HOLES CENTER.

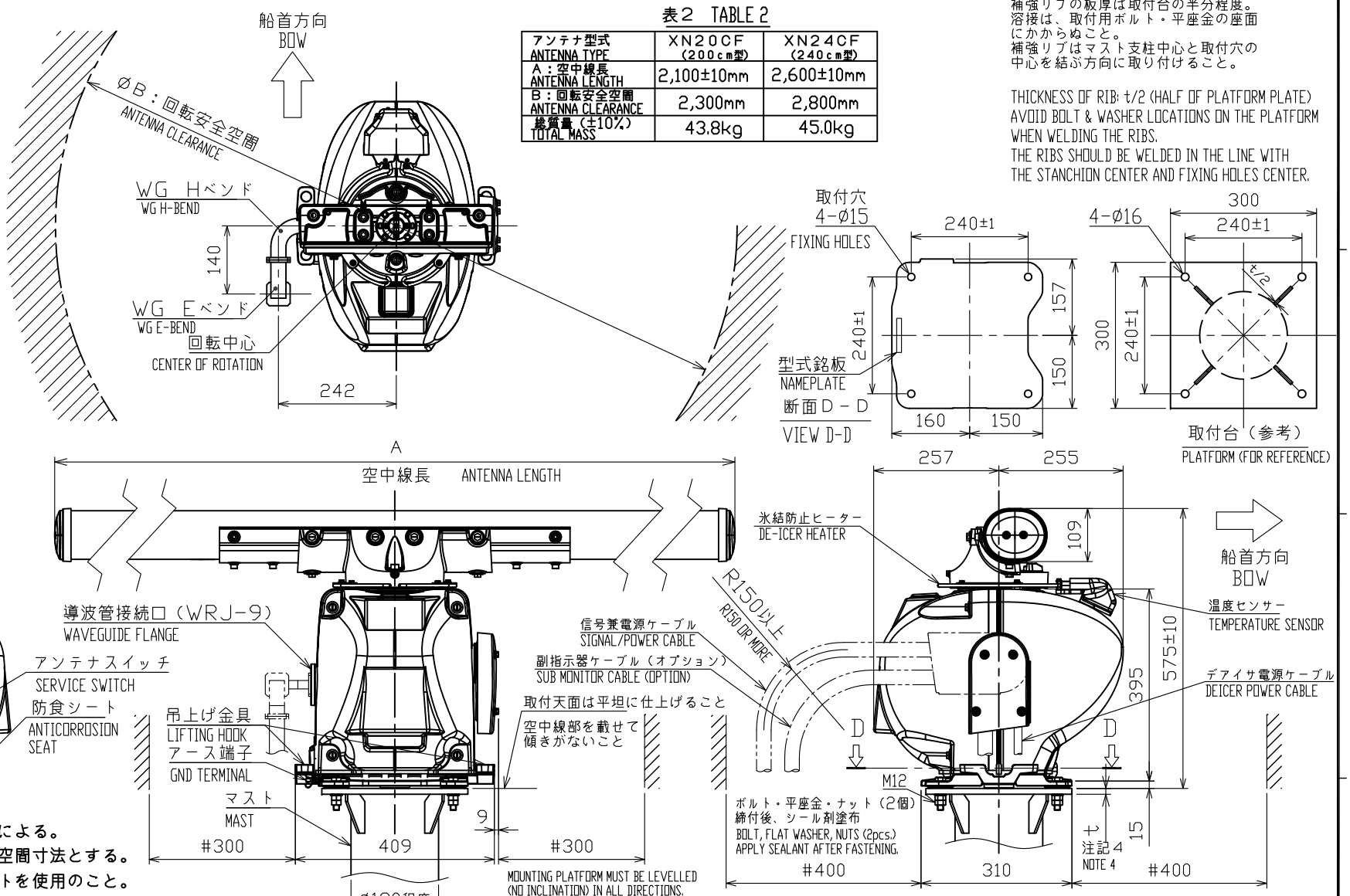

注　記
１）指定外の寸法公差は表１による。
２）＃印寸法は最小サービス空間寸法とする。
３）取付用ネジはＭ１２ボルトを使用のこと。
４）取付台は厚さ（t）12mm以上の鋼・鉄板を使用のこと。

NOTE
1. TABLE 1 INDICATES TOLERANCE OF DIMENSIONS WHICH IS NOT SPECIFIED.
2. #: MINIMUM SERVICE CLEARANCE.
3. USE M12 BOLTS FOR FIXING THE UNIT.
4. THICKNESS OF PLATFORM (t): 12 mm OR MORE STEEL PLATE.

DRAWN 6/Nov/2017 T.YAMASAKI		TITLE	RSB-130
CHECKED 6/Nov/2017 H.MAKI		名称	空中線部（氷結防止付）
APPROVED 6/Nov/2017 H.MAKI	FAR-3320W/3220W-BB		外寸図
SCALE 1/12	MASS 表2参照 SEE TABLE 2	NAME	ANTENNA UNIT (W/ DEICER)
DWG.No. C3624-G04- E	REF.No. 03-182-331G-5		OUTLINE DRAWING

FURUNO ELECTRIC CO., LTD.

FURUNO

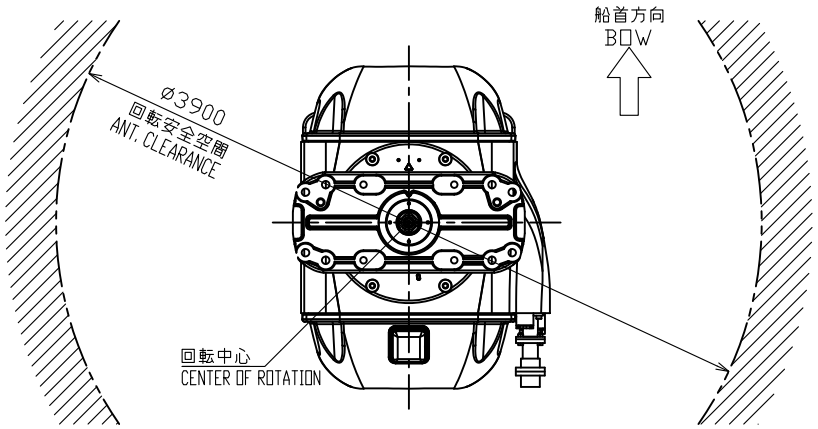

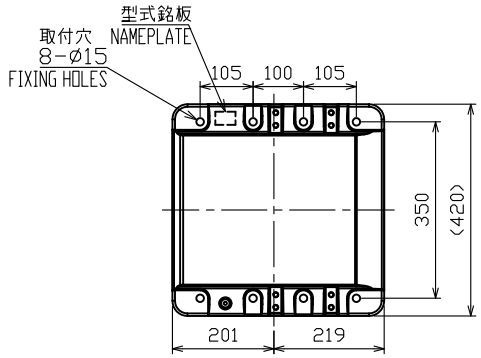

断面D－D
VIEW D-D

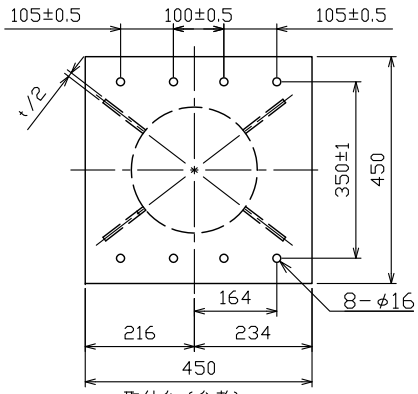

取付台（参考）
PLATFORM (FOR REFERENCE)

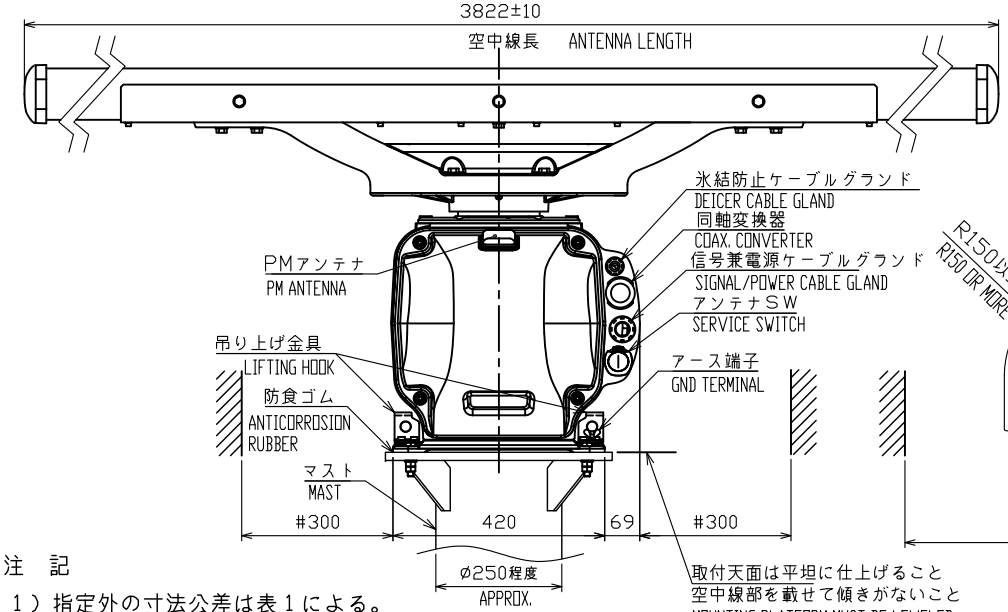

ケーブルグランドは
未使用のものも含め
シール剤で防水する。
APPLY SEALANT ONTO
THE CABLE GLANDS
FOR WATER-TIGHTNESS
IF NOT USED ALSO.

取付天面は平坦に仕上げること
空中線部を載せて傾きがないこと
MOUNTING PLATFORM MUST BE LEVELED
(NO INCLINATION) IN ALL DIRECTIONS.

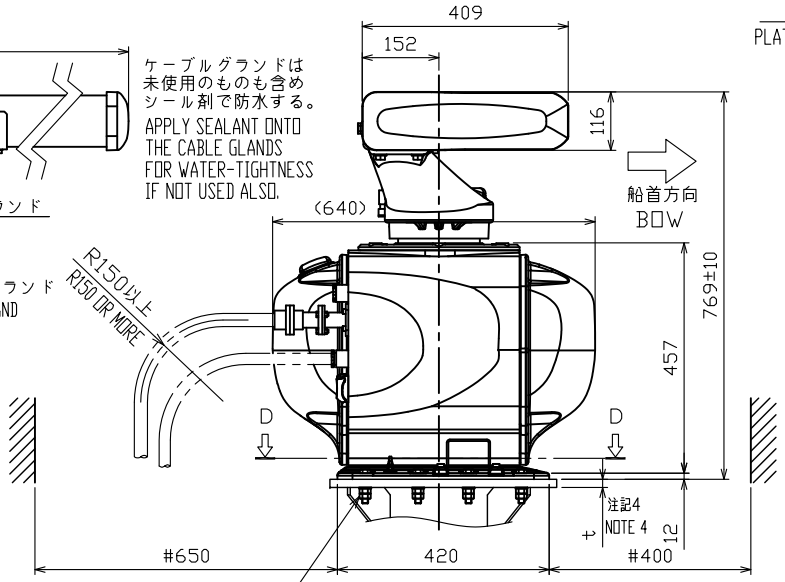

ボルト、平座金、ナット（2個）
締付後、シール剤塗布
BOLT, FLAT WASHER, NUTS (2pcs.)
APPLY SEALANT AFTER FASTENING.

補強リブの板厚は取付台の半分程度。
溶接は、取付用ボルト・平座金の座面
にかからぬこと。
補強リブはマスト支柱中心と取付台の
対角線方向近傍に取り付けること。

THICKNESS OF RIB: t/2 (HALF OF PLATFORM PLATE)
AVOID BOLT & WASHER LOCATIONS ON THE PLATFORM
WHEN WELDING THE RIBS.
THE RIBS SHOULD BE WELDED NEAR THE LINE WITH
THE STANCION CENTER AND PLATFORM CORNER.

表1 TABLE 1

寸法区分（mm）DIMENSION	公差（mm）TOLERANCE
L≦50	±1.5
50<L≦100	±2.5
100<L≦500	±3
500<L≦1000	±4
1000<L≦2000	±5
2000<L≦4000	±7

注　記

1）指定外の寸法公差は表１による。
2）＃印寸法は最小サービス空間寸法とする。
3）取付用ネジはＭ１２ボルトを使用のこと。
4）取付台厚さ（ｔ）：１５ｍｍ以上の鋼・鉄板を使用のこと。

NOTE

1. TABLE 1 INDICATES TOLERANCE OF DIMENSIONS WHICH IS NOT SPECIFIED.
2. #: MINIMUM SERVICE CLEARANCE.
3. USE M12 BOLTS FOR FIXING THE UNIT.
4. THICKNESS OF PLATFORM (t): 15 mm OR MORE STEEL PLATE.

DRAWN 6/Dec/2018 T.YAMASAKI		TITLE	RSB-131
CHECKED 6/Dec/2018 H.MAKI		名称	空中線部（PMあり、氷結防止なし）
APPROVED 10/Dec/2018 H.MAKI	FAR-3330SW		外寸図
SCALE 1/15 MASS 128 ±10% kg		NAME	ANTENNA UNIT (W/ PM, W/O DE-ICER)
DWG.No. C3625-G01-E	REF.No. 03-183-330G-5		OUTLINE DRAWING

FURUNO ELECTRIC CO., LTD.

FURUNO

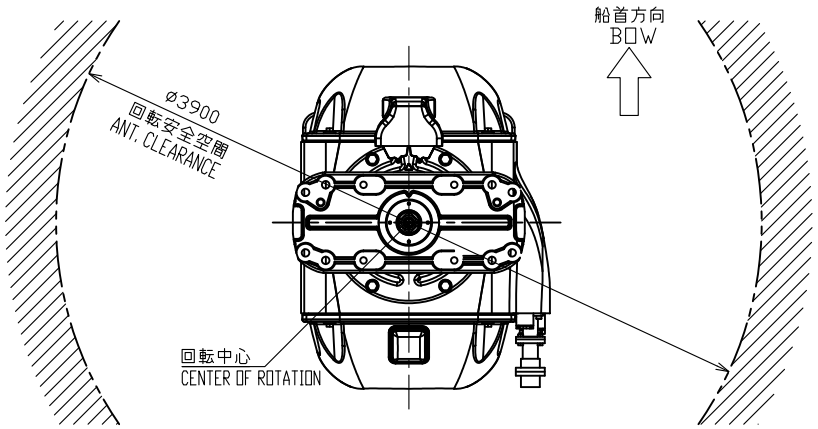

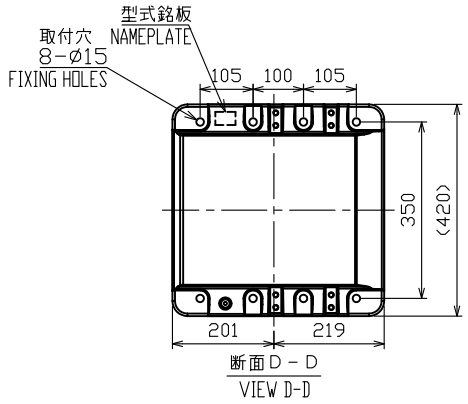

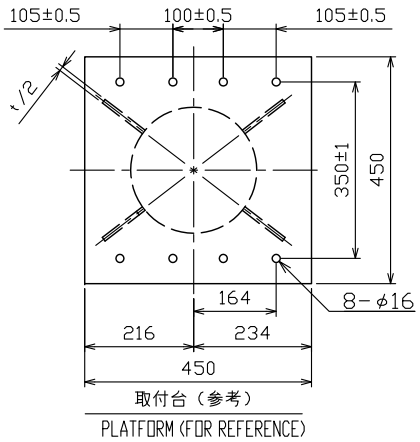

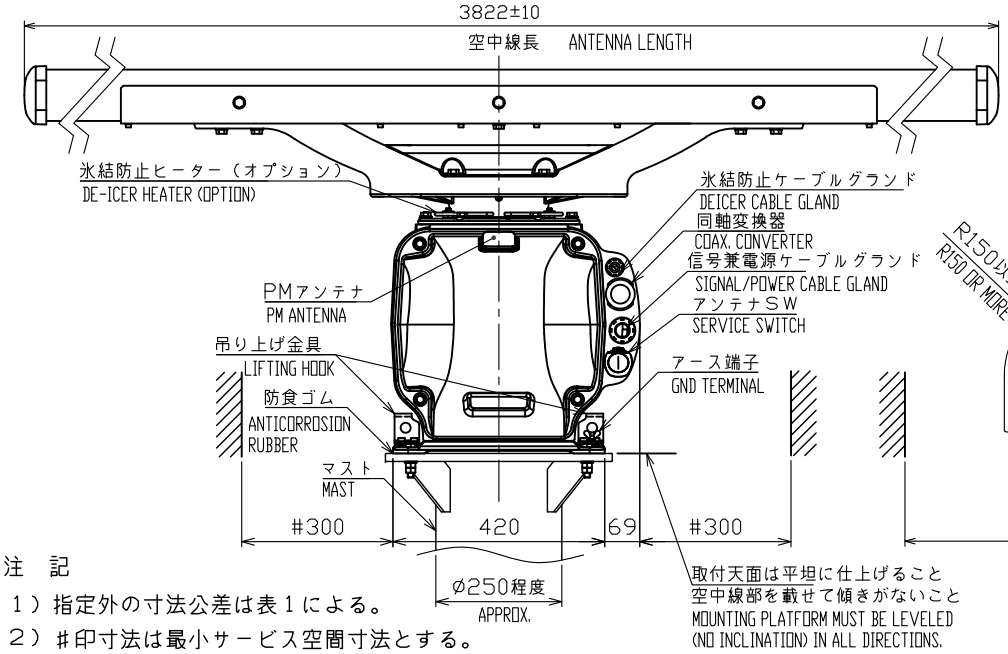

ケーブルグランドは
未使用のものも含め
シール剤で防水する。
APPLY SEALANT ONTO
THE CABLE GLANDS
FOR WATER-TIGHTNESS
IF NOT USED ALSO.

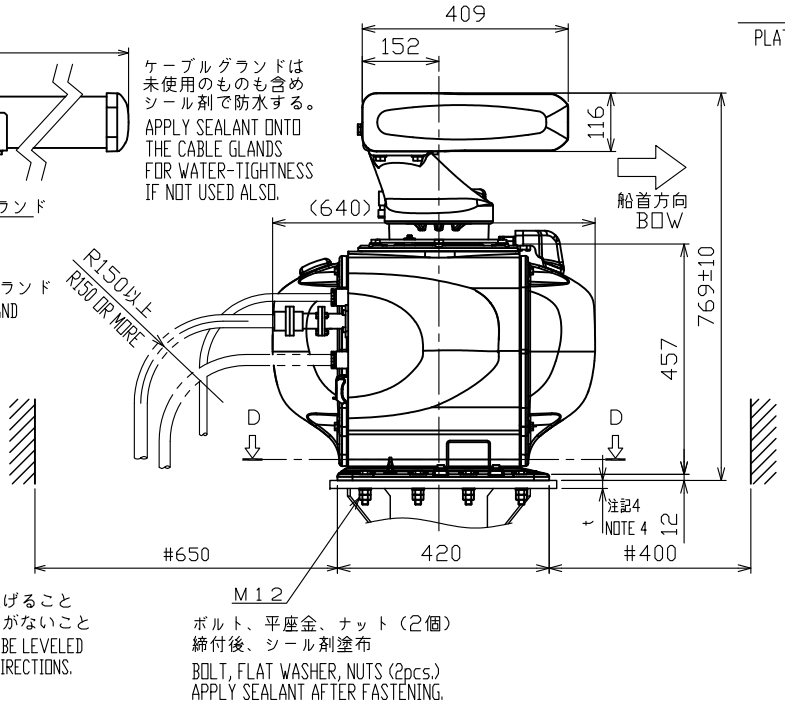

補強リブの板厚は取付台の半分程度。
溶接は、取付用ボルト・平座金の座面
にかからぬこと。
補強リブはマスト支柱中心と取付台の
対角線方向近傍に取り付けること。

THICKNESS OF RIB: t/2 (HALF OF PLATFORM PLATE)
AVOID BOLT & WASHER LOCATIONS ON THE PLATFORM
WHEN WELDING THE RIBS.
THE RIBS SHOULD BE WELDED NEAR THE LINE WITH
THE STANCION CENTER AND PLATFORM CORNER.

取付天面は平坦に仕上げること
空中線部を載せて傾きがないこと
MOUNTING PLATFORM MUST BE LEVELED
(NO INCLINATION) IN ALL DIRECTIONS.

ボルト、平座金、ナット（2個）
締付後、シール剤塗布
BOLT, FLAT WASHER, NUTS (2pcs.)
APPLY SEALANT AFTER FASTENING.

表1 TABLE 1

寸法区分（mm）DIMENSION	公差（mm）TOLERANCE
L≦50	±1.5
50<L≦100	±2.5
100<L≦500	±3
500<L≦1000	±4
1000<L≦2000	±5
2000<L≦4000	±7

注　記

1）指定外の寸法公差は表１による。
2）＃印寸法は最小サービス空間寸法とする。
3）取付用ネジはＭ１２ボルトを使用のこと。
4）取付台厚さ（ｔ）：１５ｍｍ以上の鋼・鉄板を使用のこと。

NOTE

1. TABLE 1 INDICATES TOLERANCE OF DIMENSIONS WHICH IS NOT SPECIFIED.
2. #: MINIMUM SERVICE CLEARANCE.
3. USE M12 BOLTS FOR FIXING THE UNIT.
4. THICKNESS OF PLATFORM (t): 15 mm OR MORE STEEL PLATE.

DRAWN 6/Dec/2018 T.YAMASAKI		TITLE	RSB-131
CHECKED 6/Dec/2018 H.MAKI		名称	空中線部（PMあり、氷結防止あり）
APPROVED 10/Dec/2018 H.MAKI	FAR-3330SW		外寸図
SCALE 1/15 MASS 129 ±10% kg		NAME	ANTENNA UNIT (W/PM, W/ DE-ICER)
DWG.No. C3625-G03-E	REF.No. 03-183-340G-4		OUTLINE DRAWING

FURUNO ELECTRIC CO., LTD.

FURUNO

表1 TABLE 1

寸法区分 (mm) DIMENSION	公差 (mm) TOLERANCE
L≦50	±1.5
50<L≦100	±2.5
100<L≦500	±3
500<L≦1000	±4
1000<L≦2000	±5
2000<L≦4000	±7

表2 TABLE 2

アンテナ型式 MODEL	XN24AF (240cm型)	XN30AF (300cm型)
A：空中線長(mm) ANTENNA LENGTH	2,550±10	3,210±10
B：回転安全空間(mm) ANTENNA CLEARANCE	2,700	3,340
質量 (kg±10%) MASS	74	79

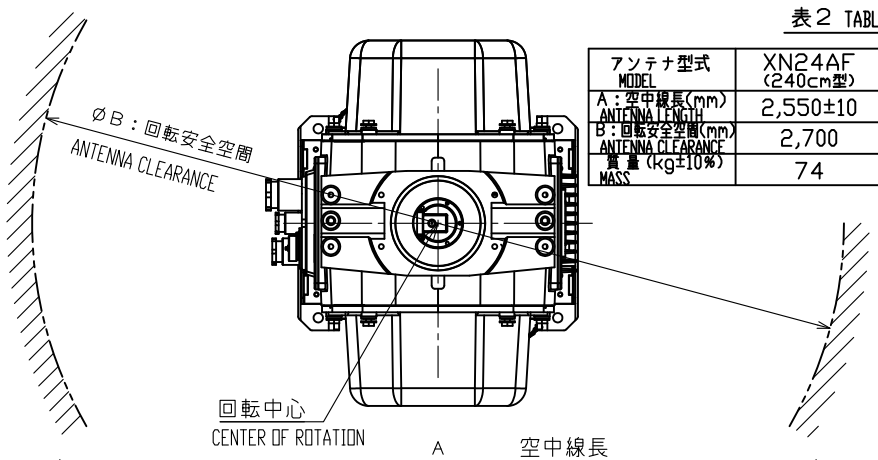

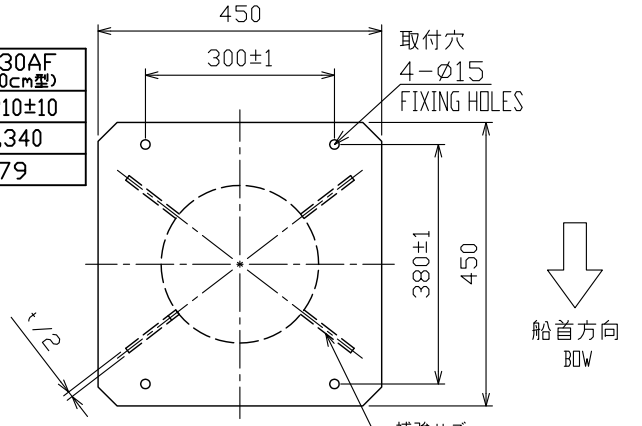

取付台例（参考）
PLATFORM (FOR REFERENCE)

補強リブ
補強リブ板厚は、取付台板厚の半分程度とする。
溶接は取付ボルト・平座金の座面にかからぬこと。
THICKNESS OF RIB:
t/2 (HALF OF PLATFORM PLATE)
AVOID BOLT/WASHER LOCATIONS ON THE PLATFORM WHEN WELDING.

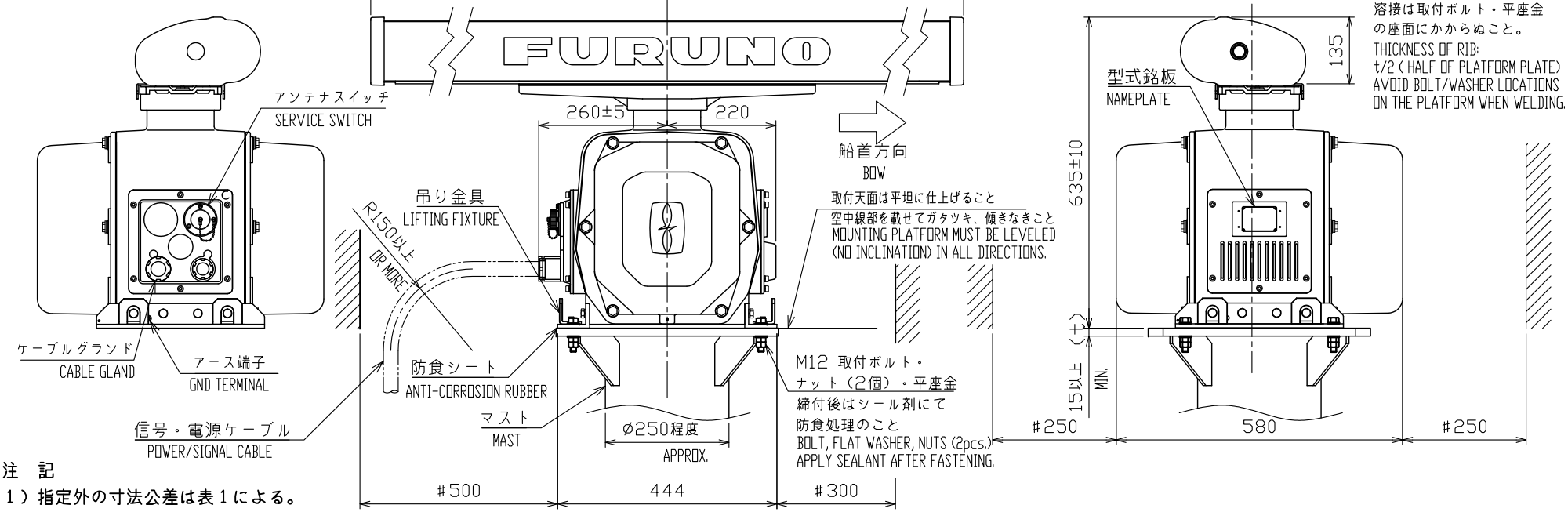

注　記
1）指定外の寸法公差は表１による。
2）＃印寸法は最小サービス空間寸法とする。
3）取付用ネジはＭ１２ボルトを使用のこと。

NOTE
1. TABLE 1 INDICATES TOLERANCE OF DIMENSIONS WHICH IS NOT SPECIFIED.
2. #: MINIMUM SERVICE CLEARANCE.
3. USE M12 BOLTS FOR FIXING THE UNIT.

DRAWN 7/May/2019 T.YAMASAKI		TITLE	RSB-139
CHECKED 7/May/2019 H.MAKI		名称	空中線部（PMなし）
APPROVED 8/May/2019 H.MAKI	FAR-2x58		外寸図
SCALE 1/12	MASS 表2参照 TABLE 2	NAME	ANTENNA UNIT (W/O PM)
DWG.No. C3672-G02- B	REF.No. 03-195-310G-2		OUTLINE DRAWING

FURUNO ELECTRIC CO., LTD.

FURUNO

表1 TABLE 1

寸法区分 (mm) DIMENSION	公差 (mm) TOLERANCE
L≦50	±1.5
50<L≦100	±2.5
100<L≦500	±3
500<L≦1000	±4
1000<L≦2000	±5
2000<L≦4000	±7

表2 TABLE 2

アンテナ型式 MODEL	XN24AF (240cm型)	XN30AF (300cm型)
A：空中線長(mm) ANTENNA LENGTH	2,550±10	3,210±10
B：回転安全空間(mm) ANTENNA CLEARANCE	2,700	3,340
質量 (kg±10%) MASS	74	79

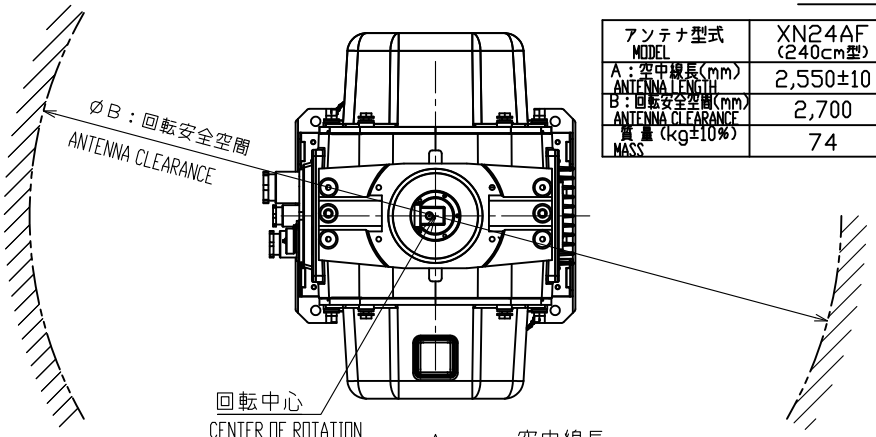

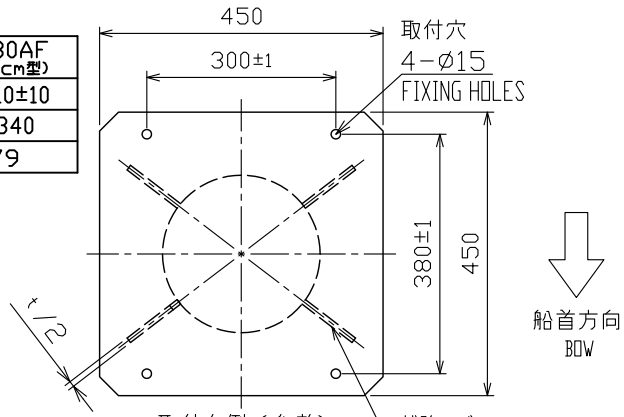

取付台例（参考）
PLATFORM (FOR REFERENCE)

補強リブ
補強リブ板厚は、取付台板厚の半分程度とする。
溶接は取付ボルト・平座金の座面にかからぬこと。
THICKNESS OF RIB:
t/2 (HALF OF PLATFORM PLATE)
AVOID BOLT/WASHER LOCATIONS ON THE PLATFORM WHEN WELDING.

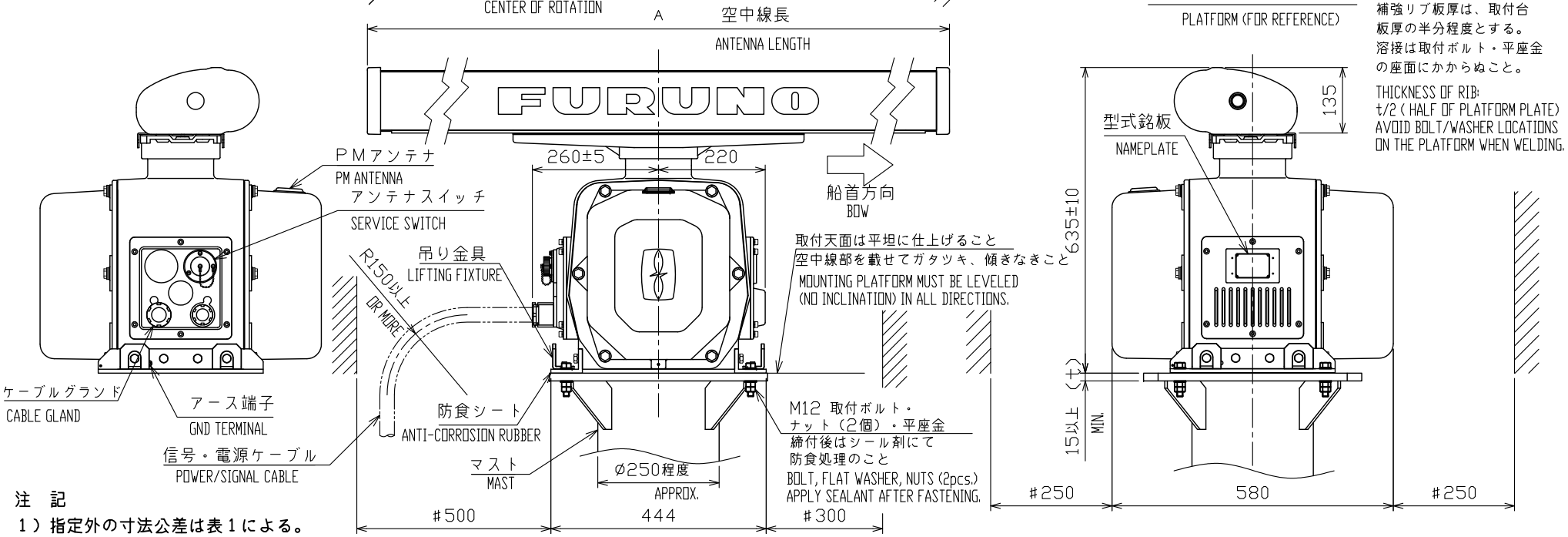

注　記

1）指定外の寸法公差は表１による。

2）＃印寸法は最小サービス空間寸法とする。

3）取付用ネジはＭ１２ボルトを使用のこと。

NOTE

1. TABLE 1 INDICATES TOLERANCE OF DIMENSIONS WHICH IS NOT SPECIFIED.
2. #: MINIMUM SERVICE CLEARANCE.
3. USE M12 BOLTS FOR FIXING THE UNIT.

DRAWN 7/May/2019 T.YAMASAKI		TITLE	RSB-139
CHECKED 7/May/2019 H.MAKI		名称	空中線部（PMあり）
APPROVED 8/May/2019 H.MAKI	FAR-2x58		外寸図
SCALE 1/12	MASS 表2参照 TABLE 2	NAME	ANTENNA UNIT (W/ PM)
DWG.No. C3672-G03- B	REF.No. 03-195-300G-4		OUTLINE DRAWING

FURUNO ELECTRIC CO., LTD.

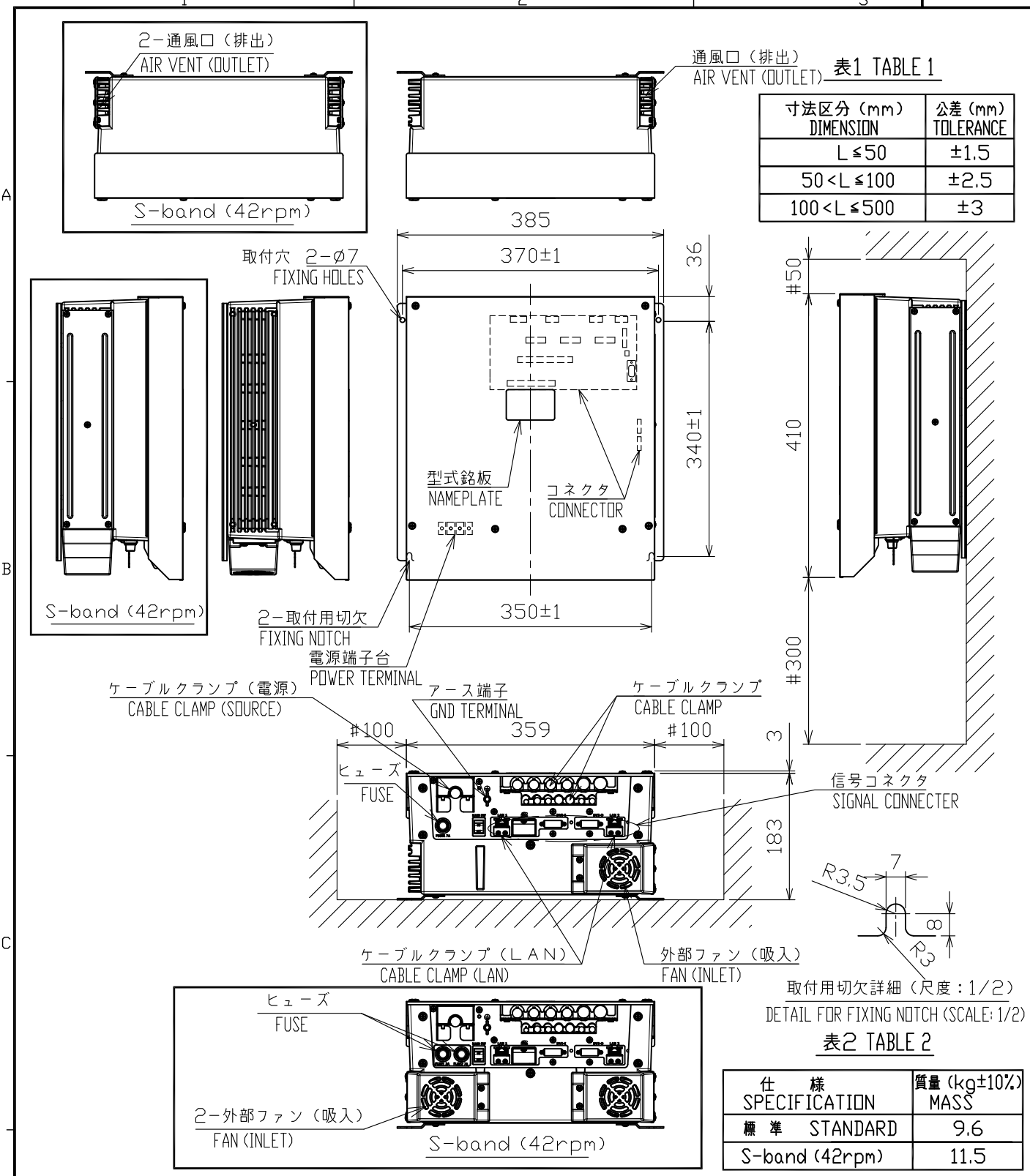

表1 TABLE 1

寸法区分（mm）DIMENSION	公差（mm）TOLERANCE
L≦50	±1.5
50<L≦100	±2.5
100<L≦500	±3

表2 TABLE 2

仕　様 SPECIFICATION	質量（kg±10%）MASS
標　準　STANDARD	9.6
S-band (42rpm)	11.5

注記　1）指定外の寸法公差は表１による。
　　2）＃印寸法は最小サービス空間寸法とする。
　　3）取付用ネジはＭ６ボルトまたはコーチボルト呼び径６を使用のこと。

NOTE 1. TABLE 1 INDICATES TOLERANCE OF DIMENSIONS WHICH IS NOT SPECIFIED.
2. #: MINIMUM SERVICE CLEARANCE.
3. USE M6 BOLTS OR COARCH SCREWS Ø6 FOR FIXING THE UNIT.

DRAWN 27/Oct/2017 T.YAMASAKI		TITLE	RPU-025
CHECKED 27/Oct/2017 H.MAKI		名称	制御部（壁掛・卓上装備）
APPROVED 27/Oct/2017 H.MAKI	FAR-2xx8 ser.		外寸図
SCALE 1/8	MASS 表2参照 SEE TABLE 2	NAME	PROCESSOR UNIT (BULKHEAD/TABLETOP MOUNT)
DWG. No. C3652-G01- B	REF. No. 03-193-100G- 7		OUTLINE DRAWING

表1 TABLE 1

寸法区分（mm） DIMENSION	公差（mm） TOLERANCE
L≦50	±1.5
50<L≦100	±2.5
100<L≦500	±3

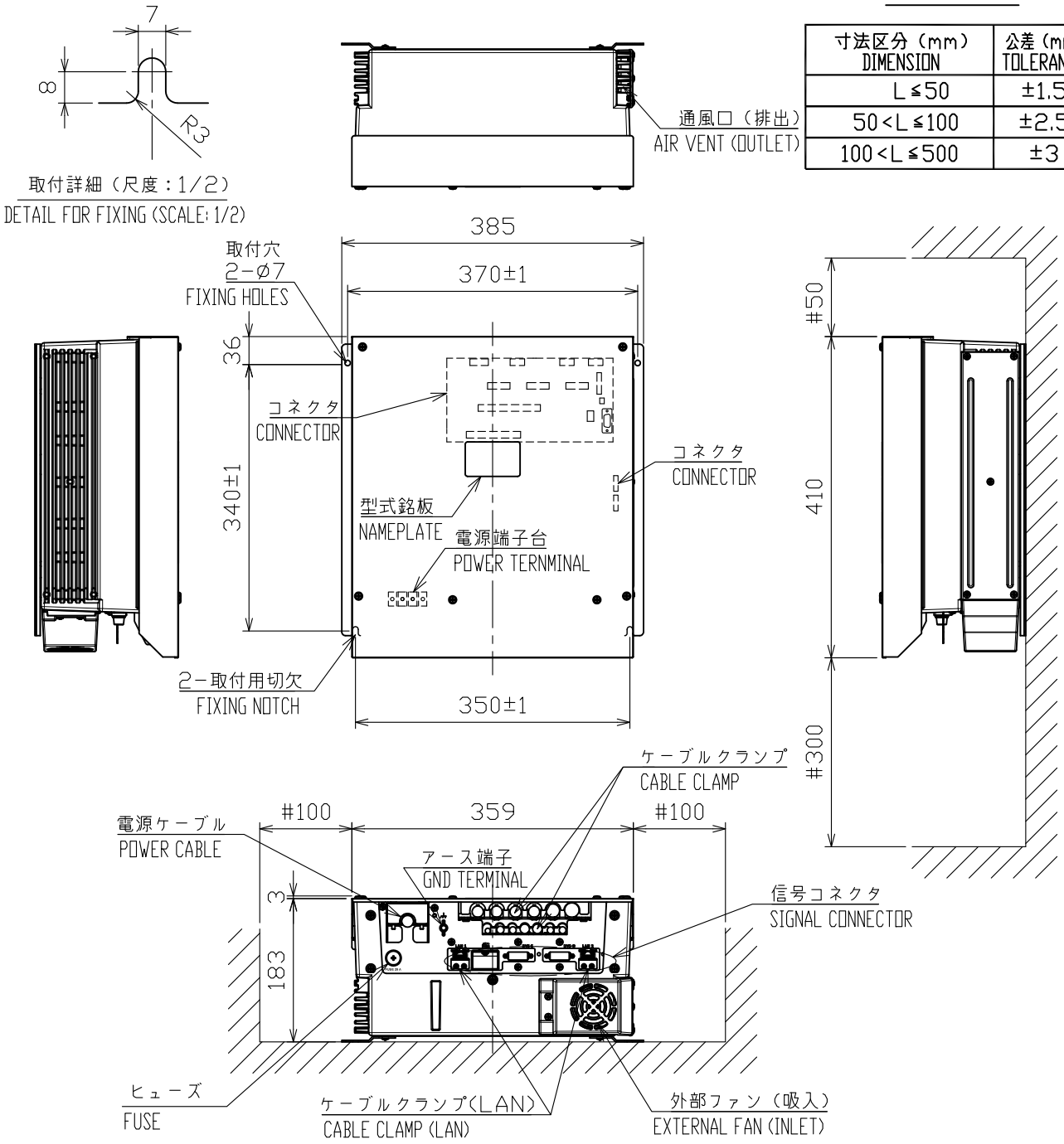

注記　1）指定外の寸法公差は表1による。
　　2）#印寸法は最小サービス空間寸法とする。
　　3）取付用ネジはM6ボルトまたはコーチねじ呼び径6を使用のこと。

NOTE 1. TABLE 1 INDICATES TOLERANCE OF DIMENSIONS WHICH IS NOT SPECIFIED.
2. #: MINIMUM SERVICE CLEARANCE.
3. USE M6 BOLTS OR COARCH SCREWS Ø6 FOR FIXING THE UNIT.

DRAWN 18/Mar/2019 T.YAMASAKI		TITLE	RPU-025 (DC SPEC)
CHECKED 18/Mar/2019 H.MAKI		名称	制御部（壁掛・卓上装備）
APPROVED 19/Mar/2019 H.MAKI	FAR-2218/2228		外寸図
SCALE 1/8	MASS 8.8 ±10% kg	NAME	PROCESSOR UNIT (BULKHEAD/TABLETOP MOUNT)
DWG. No. C3652-G06- A	REF. No. 03-193-102G- 0		OUTLINE DRAWING

FURUNO

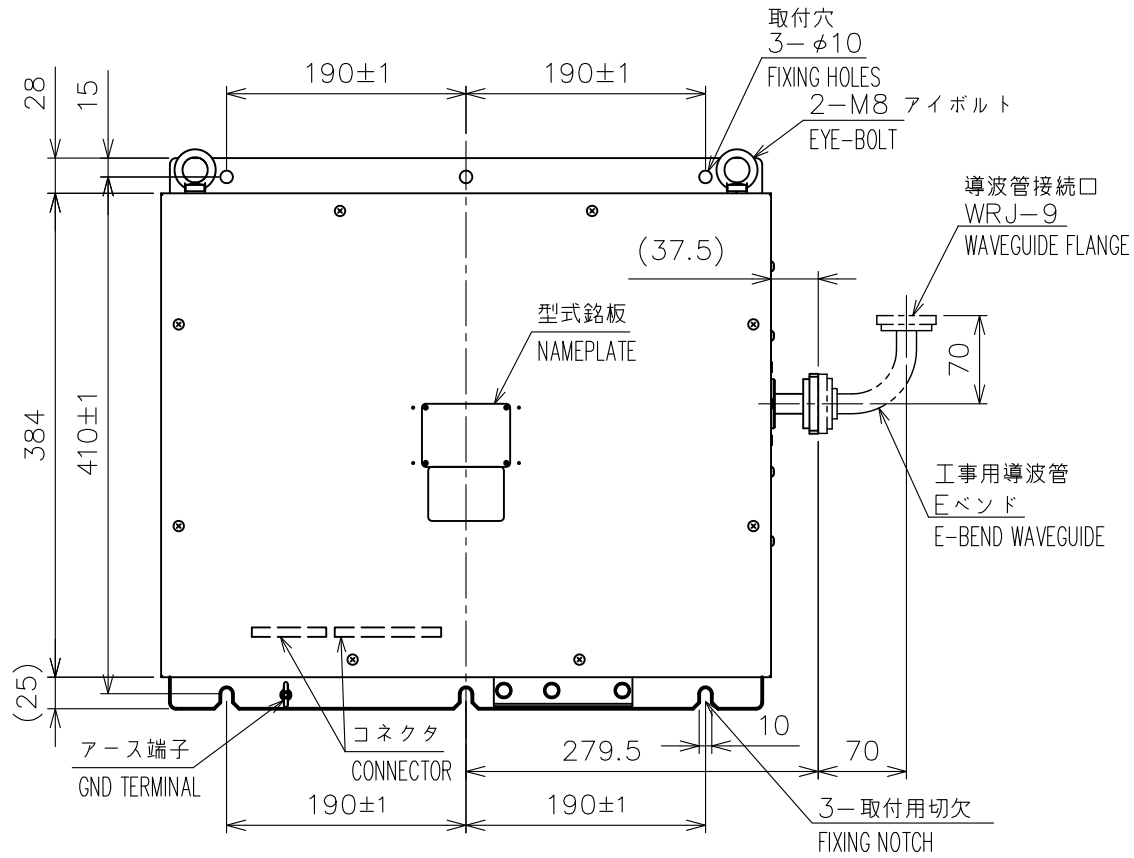

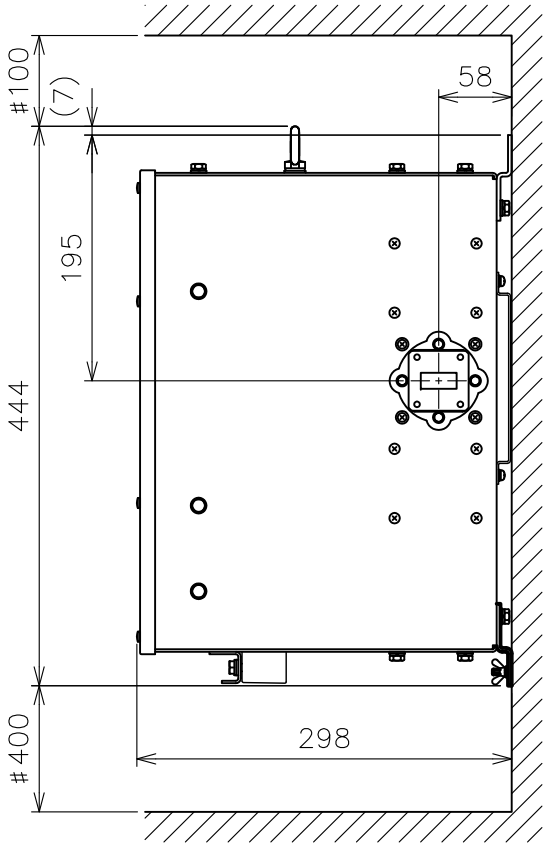

表1 TABLE 1

寸法区分（mm） DIMENSION	公差（mm） TOLERANCE
L≦50	±1.5
50<L≦100	±2.5
100<L≦500	±3

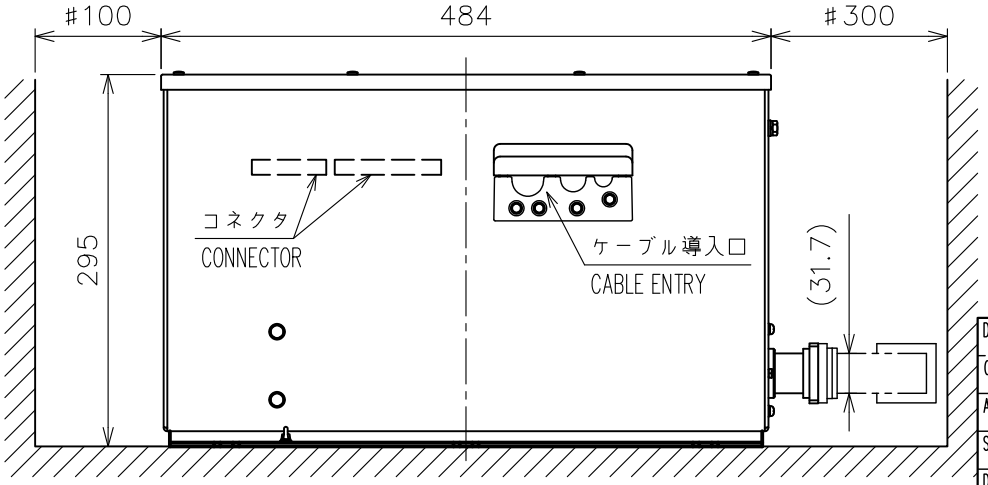

注　記　1）指定外の寸法公差は表１による。
　　2）＃印寸法は最小サービス空間寸法とする。
　　3）取付用ネジはＭ８ボルトまたはコーチボルト呼び径８を使用のこと。

NOTE　1. TABLE 1 INDICATES TOLERANCE OF DIMENSIONS WHICH IS NOT SPECIFIED.
　　2. #: MINIMUM SERVICE CLEARANCE.
　　3. USE M8 BOLTS OR COACH SCREWS ø8 FOR FIXING THE UNIT.

DRAWN 8/Jun/2018 T.YAMASAKI			TITLE RTR-108
CHECKED 8/Jun/2018 H.MAKI			名称 送受信部（壁掛装備）
APPROVED 8/Jun/2018 H.MAKI		FAR-3320W	外寸図
SCALE 1/6	MASS 17 ±10% kg		NAME TRANSCEIVER UNIT (BULKHEAD MOUNT)
DWG. No. C3624-G01- B		REF. No. 03-182-530G-C	OUTLINE DRAWING

FURUNO ELECTRIC CO., LTD.

FURUNO

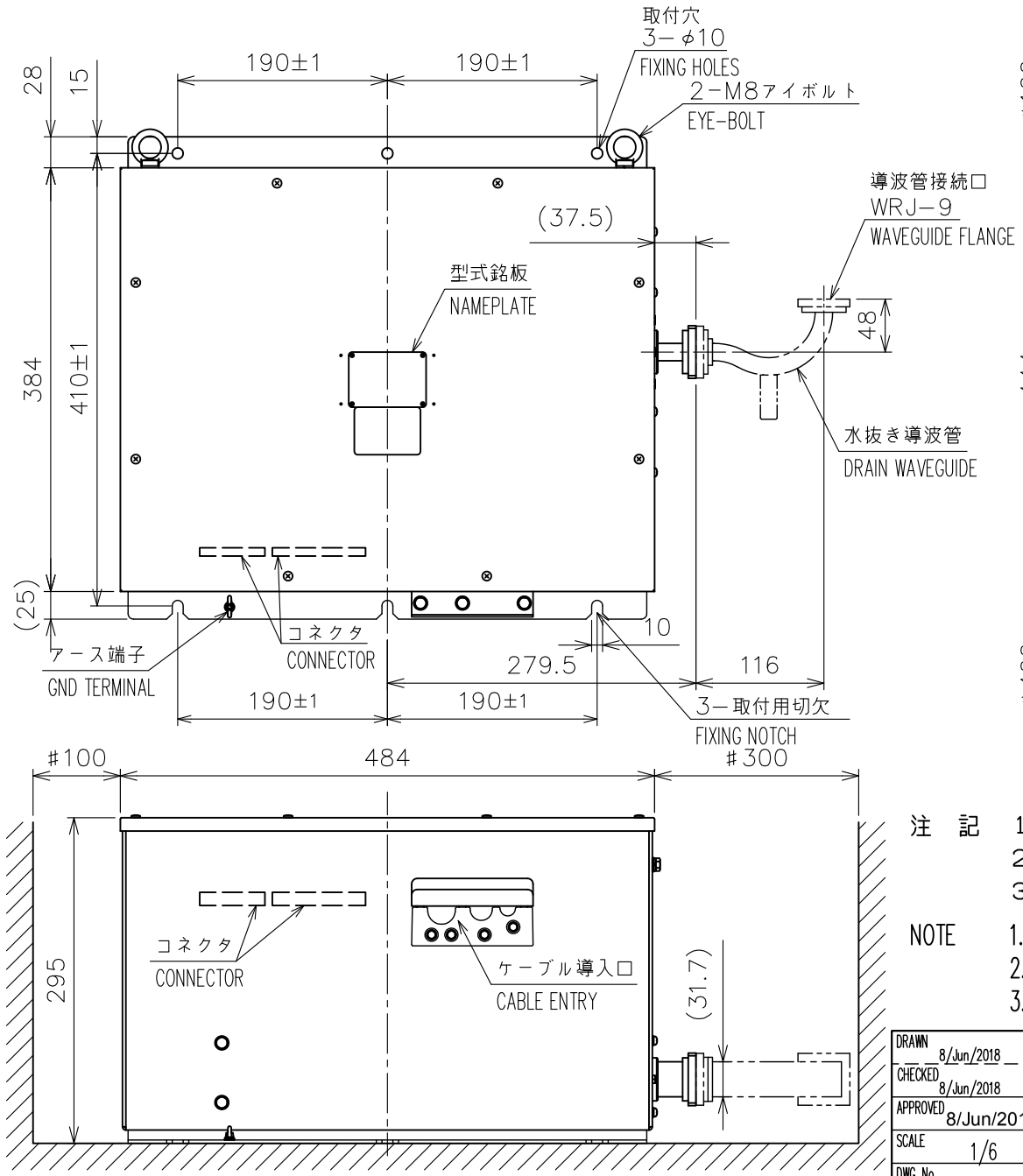

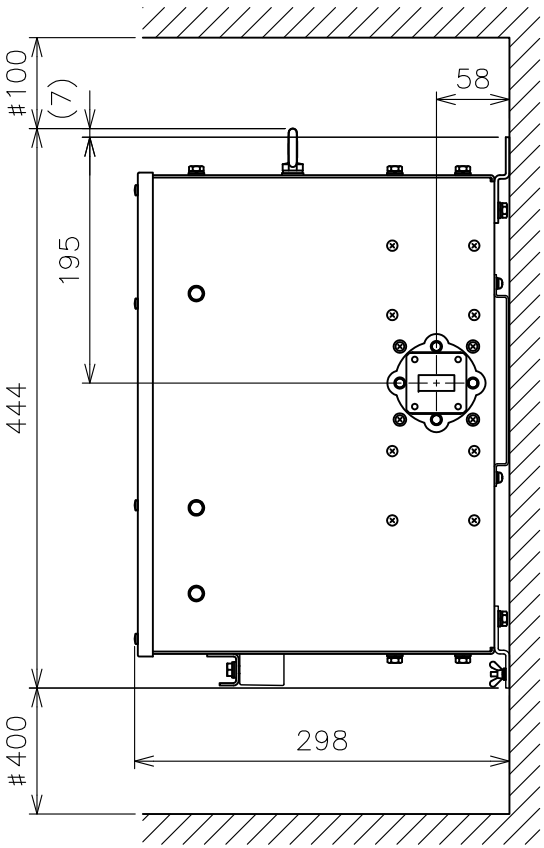

表1 TABLE 1

寸法区分（mm） DIMENSION	公差（mm） TOLERANCE
L≦50	±1.5
50<L≦100	±2.5
100<L≦500	±3

注　記　1）指定外の寸法公差は表１による。
　　2）＃印寸法は最小サービス空間寸法とする。
　　3）取付用ネジはＭ８ボルトまたはコーチボルト呼び径８を使用のこと。

NOTE　1. TABLE 1 INDICATES TOLERANCE OF DIMENSIONS WHICH IS NOT SPECIFIED.
　　2. #: MINIMUM SERVICE CLEARANCE.
　　3. USE M8 BOLTS OR COACH SCREWS ø8 FOR FIXING THE UNIT.

DRAWN 8/Jun/2018 T.YAMASAKI			TITLE RTR-108
CHECKED 8/Jun/2018 H.MAKI			名称 送受信部（壁掛装備）
APPROVED 8/Jun/2018 H.MAKI		FAR-3320W	外寸図
SCALE 1/6	MASS 17 ±10% kg		NAME TRANSCEIVER UNIT (BULKHEAD MOUNT)
DWG. No. C3624-G02- B		REF. No. 03-182-531G-C	OUTLINE DRAWING

FURUNO ELECTRIC CO., LTD.

FURUNO

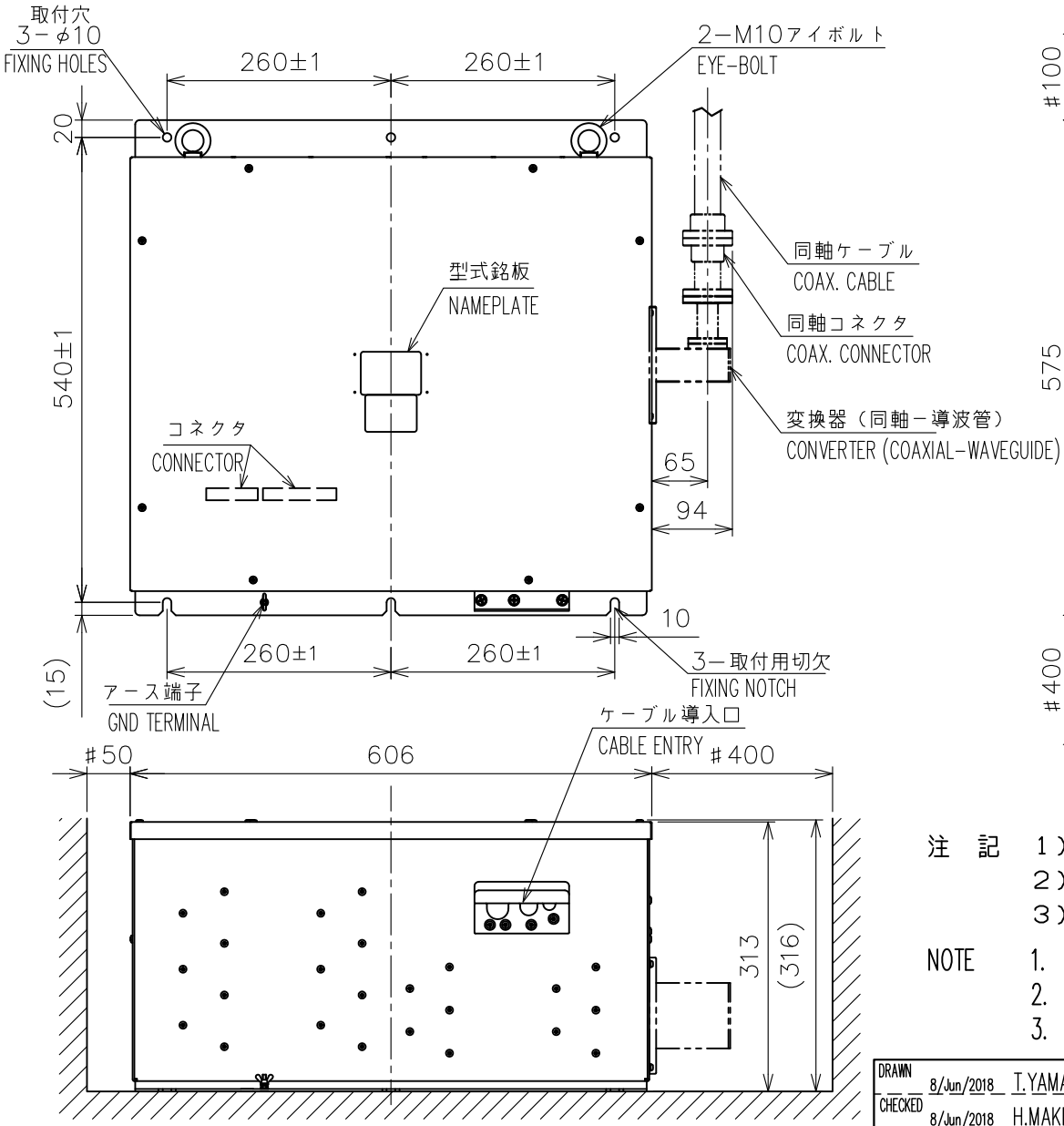

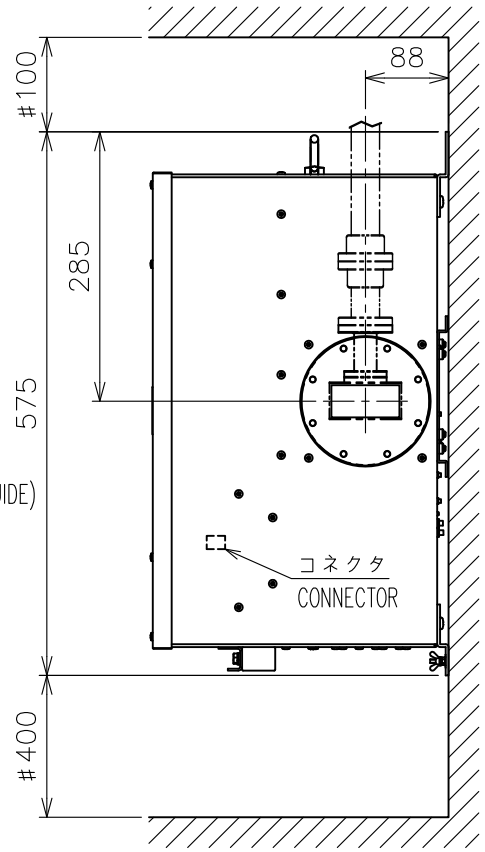

表1 TABLE 1

寸法区分（mm） DIMENSION	公差（mm） TOLERANCE
L≦50	±1.5
50<L≦100	±2.5
100<L≦500	±3
500<L≦1000	±4

注　記　1）指定外の寸法公差は表１による。
　　2）＃印寸法は最小サービス空間寸法とする。
　　3）取付用ネジはＭ８ボルトまたはコーチボルト呼び径８を使用のこと。

NOTE　1. TABLE 1 INDICATES TOLERANCE OF DIMENSIONS WHICH IS NOT SPECIFIED.
　　2. #: MINIMUM SERVICE CLEARANCE.
　　3. USE M8 BOLTS OR COACH SCREWS ø8 FOR FIXING THE UNIT.

DRAWN 8/Jun/2018 T.YAMASAKI			TITLE RTR-109
CHECKED 8/Jun/2018 H.MAKI			名称 送受信部（壁掛装備）
APPROVED 8/Jun/2018 H.MAKI		FAR-3330SW	外寸図
SCALE 1/8	MASS 24 ±10% kg		NAME TRANSCEIVER UNIT (BULKHEAD MOUNT)
DWG.No. C3625-G02- B		REF.No. 03-183-530G-C	OUTLINE DRAWING

FURUNO ELECTRIC CO., LTD.

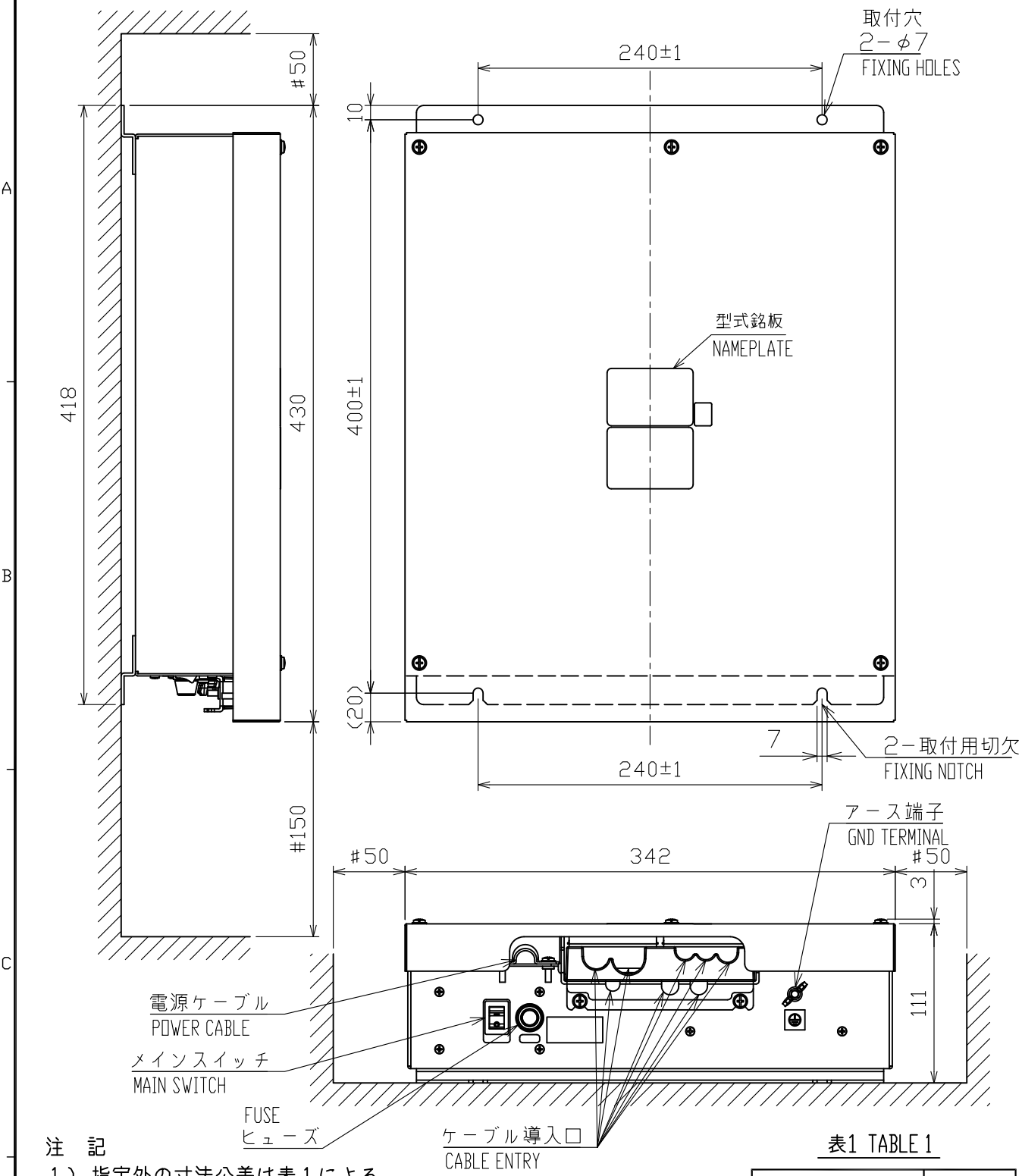

注　記

１）指定外の寸法公差は表１による。

２）＃印寸法は最小サービス空間寸法とする。

３）取付用ネジはトラスタッピンネジ呼び径６×２０を使用のこと。

NOTE

1. TABLE 1 INDICATES TOLERANCE OF DIMENSIONS WHICH IS NOT SPECIFIED.
2. #: MINIMUM SERVICE CLEARANCE.
3. USE TAPPING SCREWS Ø6x20 FOR FIXING THE UNIT.

表1 TABLE 1

寸法区分（mm） DIMENSION	公差（mm） TOLERANCE
L≦50	±1.5
50<L≦100	±2.5
100<L≦500	±3

DRAWN 25/Dec/2018 T.YAMASAKI		TITLE	PSU-019
CHECKED 25/Dec/2018 H.MAKI		名称	空中線電源部（壁掛・卓上装備）
APPROVED 8/Jan/2019 H.MAKI	FAR-2x58		外寸図
SCALE 1/4	MASS 4.7 ±10% kg	NAME	POWER SUPPLY UNIT (BULKHEAD/TABLETOP MOUNT)
DWG. No. C3672-G01- A	REF. No. 03-195-100G-3		OUTLINE DRAWING

FURUNO

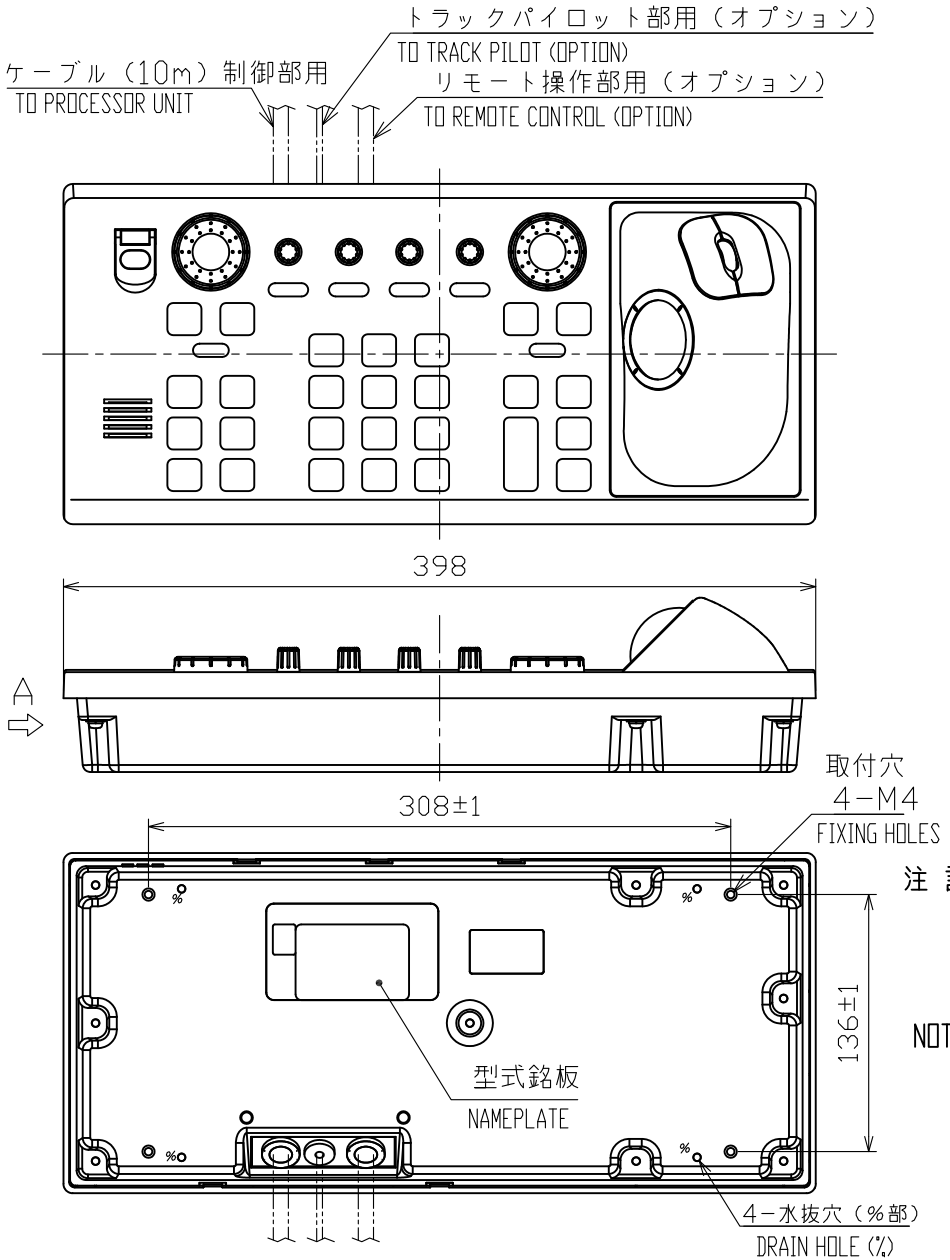

表 1 TABLE 1

寸法区分（mm）DIMENSION	公差（mm）TOLERANCE
L≦50	±1.5
50<L≦100	±2.5
100<L≦500	±3

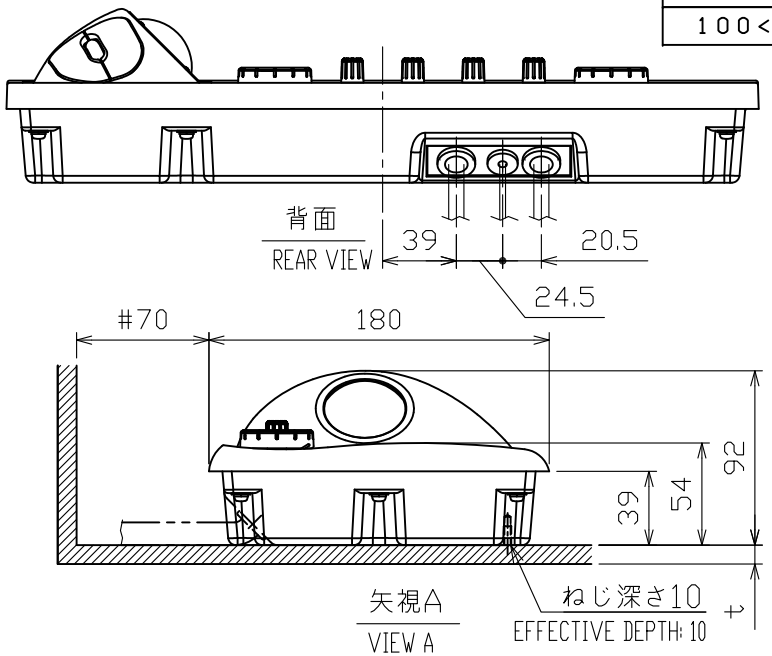

注 記
1）指定外の寸法公差は表１による。
2）＃印寸法は最小サービス空間寸法とする。
3）取付用ネジはセムスＢ（Ｍ４Ｘ１２）を使用のこと。
板厚（ｔ）は最小２最大４とする。それ以外はネジ長さを（ｔ＋７．８）±２ とする。

NOTE
1. TABLE 1 INDICATES TOLERANCE OF DIMENSIONS WHICH IS NOT SPECIFIED.
2. #: MINIMUM SERVICE CLEARANCE.
3. USE SEMS B SCREWS (M4x12) FOR FIXING THE UNIT.
MOUNTING BOARD THICKNESS(t): 2≦t≦4, OR SCREW LENGTH: t+7.8±2.

DRAWN 7/Mar/2017 T.YAMASAKI		TITLE	RCU-014
CHECKED 7/Mar/2017 H.MAKI		名称	操作部（卓上装備）
APPROVED 8/Mar/2017 H.MAKI	FAR-2xx8 SER.		外寸図
SCALE 1/4	MASS 2.5 ±10% kg 質量は10mケーブルを含む。MASS INCLUDES 10m CABLE.	NAME	CONTROL UNIT (TABLETOP MOUNT)
DWG.No. C3652-G02- B	REF.No. 03-193-200G-1		OUTLINE DRAWING

FURUNO ELECTRIC CO., LTD.

FURUNO

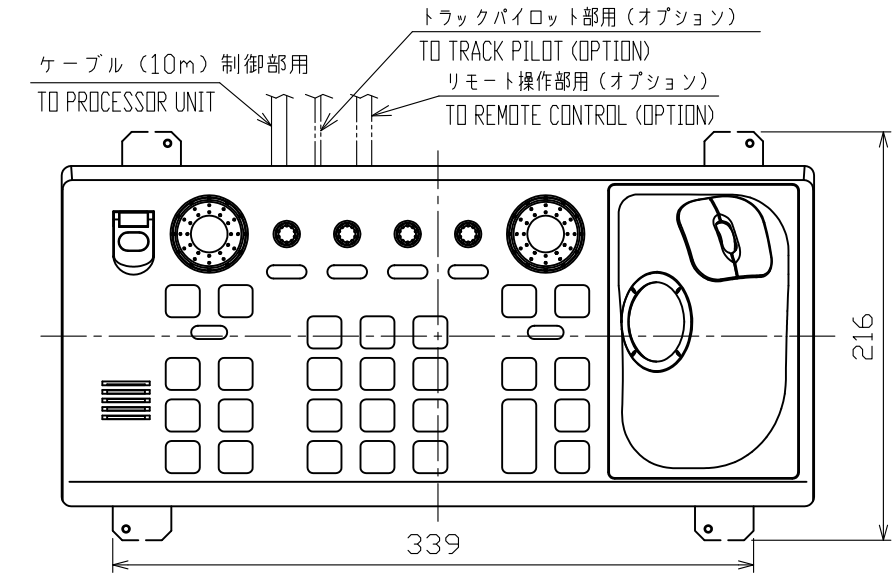

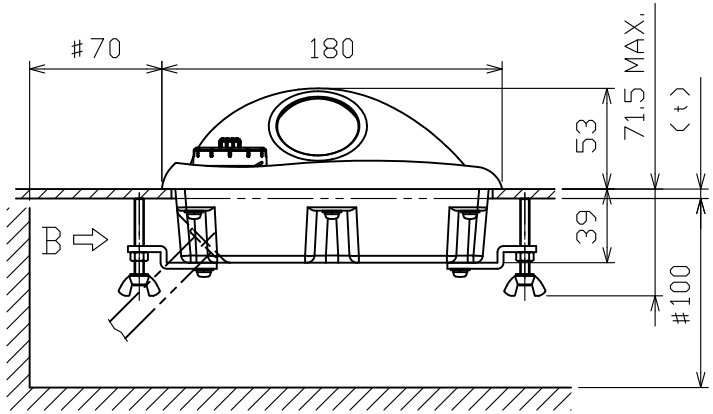

矢視A
VIEW A

表 1 TABLE 1

寸法区分（mm）DIMENSION	公差（mm）TOLERANCE
L≦50	±1.5
50<L≦100	±2.5
100<L≦500	±3

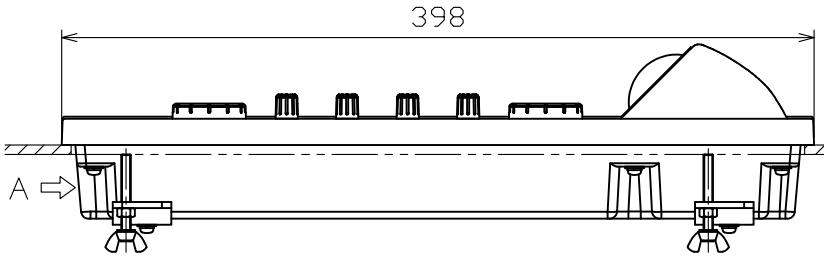

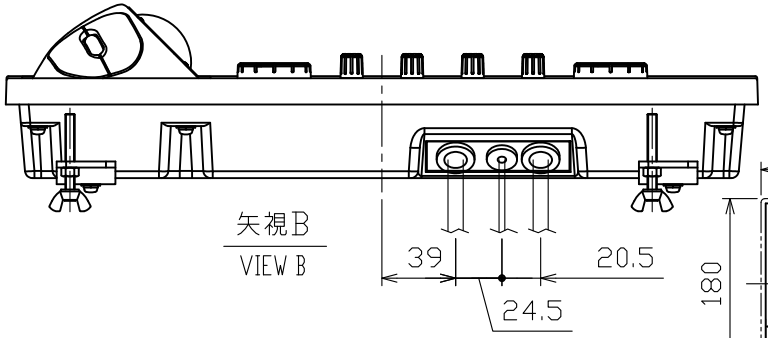

矢視B
VIEW B

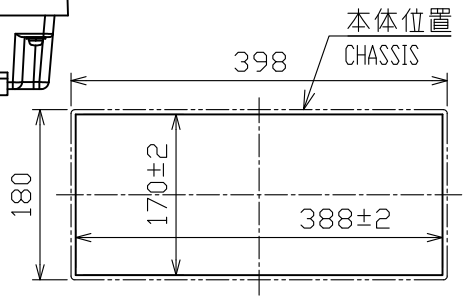

取付穴寸法（尺度：1／8）
CUTOUT DIMENSIONS (SCALE: 1/8)

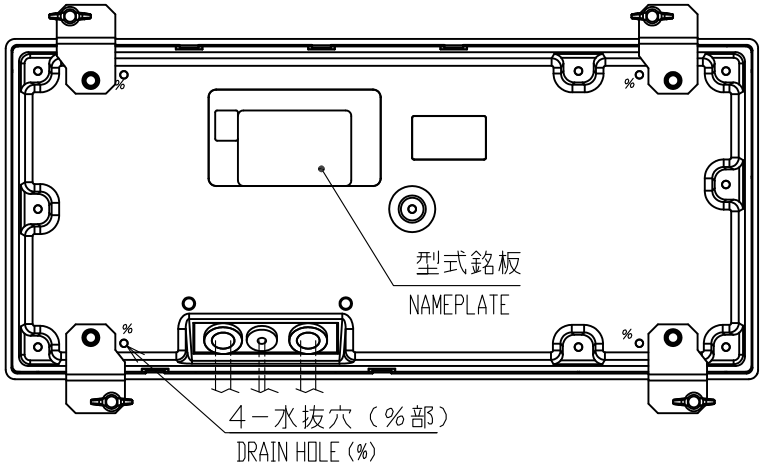

注 記
1）指定外の寸法公差は表１による。
2）＃印寸法は最小サービス空間寸法とする。
3）取付面板厚（ｔ）は最小１０ｍｍ最大２０ｍｍとする。

NOTE
1. TABLE 1 INDICATES TOLERANCE OF DIMENSIONS WHICH IS NOT SPECIFIED.
2. #: MINIMUM SERVICE CLEARANCE.
3. MOUNTING BOARD THICKNESS(t): 10≦t≦20.

DRAWN 7/Mar/2017 T.YAMASAKI		TITLE	RCU-014
CHECKED 7/Mar/2017 H.MAKI		名称	操作部（埋込装備）
APPROVED 8/Mar/2017 H.MAKI	FAR-2xx8 SER.		外寸図
SCALE 1/4 MASS 2.6 ±10% kg	質量は10mケーブルを含む。MASS INCLUDES 10m CABLE.	NAME	CONTROL UNIT (FLUSH MOUNT)
DWG.No. C3652-G03- B	REF.No. 03-193-201G-1		OUTLINE DRAWING

FURUNO ELECTRIC CO., LTD.

FURUNO

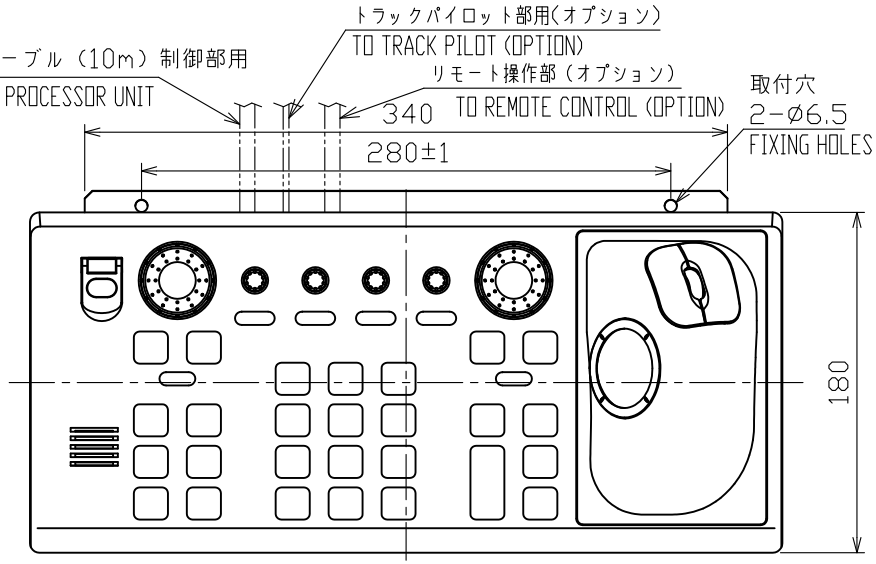

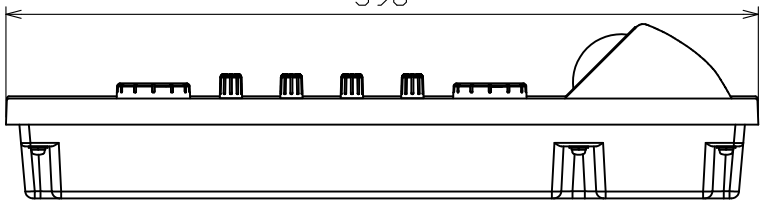

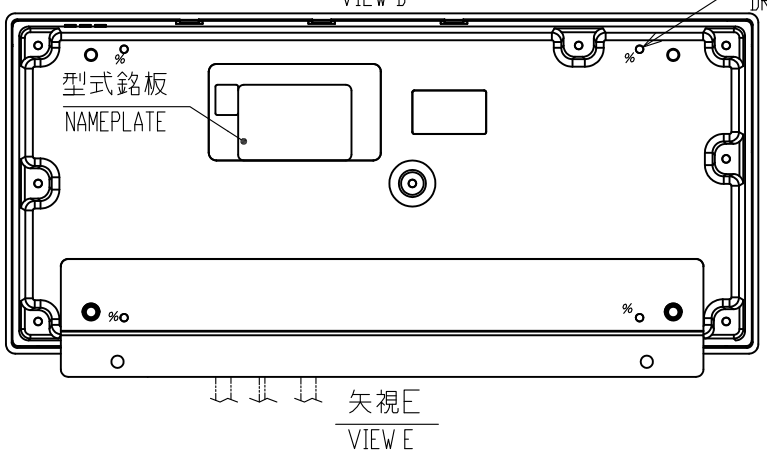

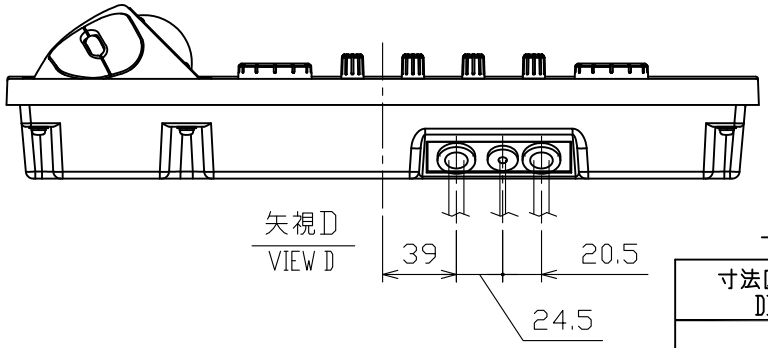

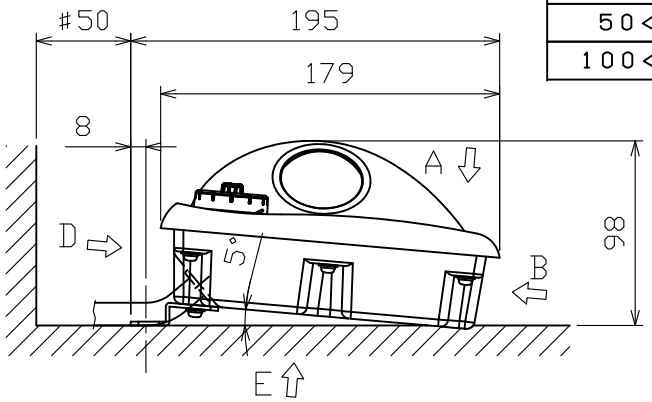

表 1 TABLE 1

寸法区分（mm）DIMENSION	公差（mm）TOLERANCE
L≦50	±1.5
50<L≦100	±2.5
100<L≦500	±3

注　記　1）指定外の寸法公差は表１による。
　　2）＃印寸法は最小サービス空間寸法とする。
　　3）取付用ネジはトラスタッピンネジ呼び径6、またはM6ボルトを使用のこと

NOTE　1. TABLE 1 INDICATES TOLERANCE OF DIMENSIONS WHICH IS NOT SPECIFIED.
　　2. #: MINIMUM SERVICE CLEARANCE.
　　3. USE TAPPING SCREWS Ø6 OR M6 BOLTS FOR FIXING THE UNIT.

DRAWN 7/Mar/2017 T.YAMASAKI			TITLE RCU-014
CHECKED 7/Mar/2017 H.MAKI			名称 操作部（金具取付）
APPROVED 8/Mar/2017 H.MAKI		FAR-2xx8 SER.	外寸図
SCALE 1/4	MASS 2.8 ±10% kg	質量は10mケーブルを含む。MASS INCLUDES 10m CABLE.	NAME CONTROL UNIT (FIXTURE MOUNT)
DWG.No. C3652-G04- B		REF.No. 03-193-202G-1	OUTLINE DRAWING

FURUNO ELECTRIC CO., LTD.

FURUNO

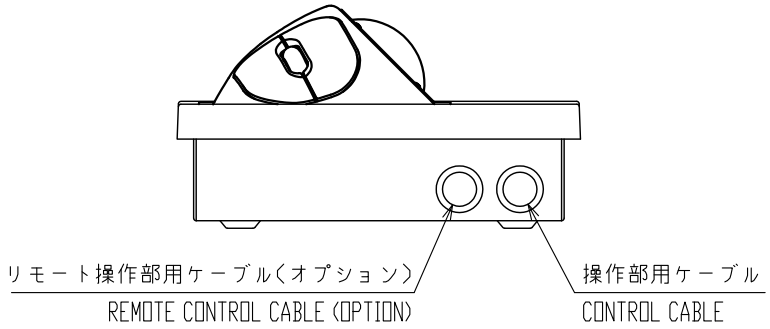

矢視A
VIEW A

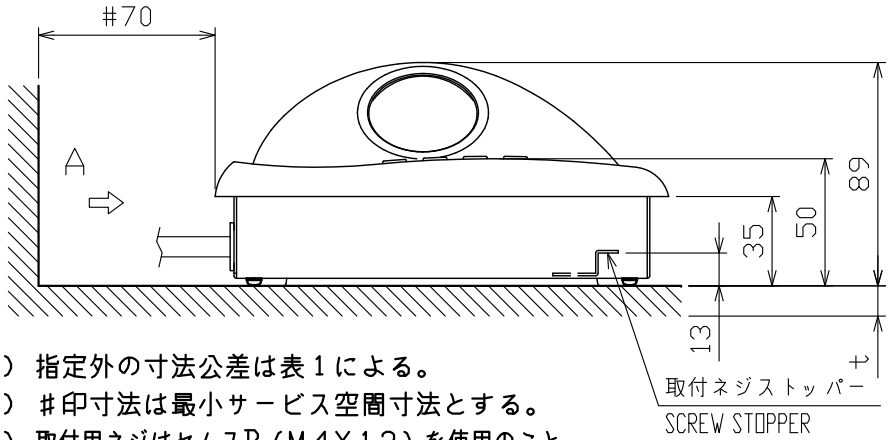

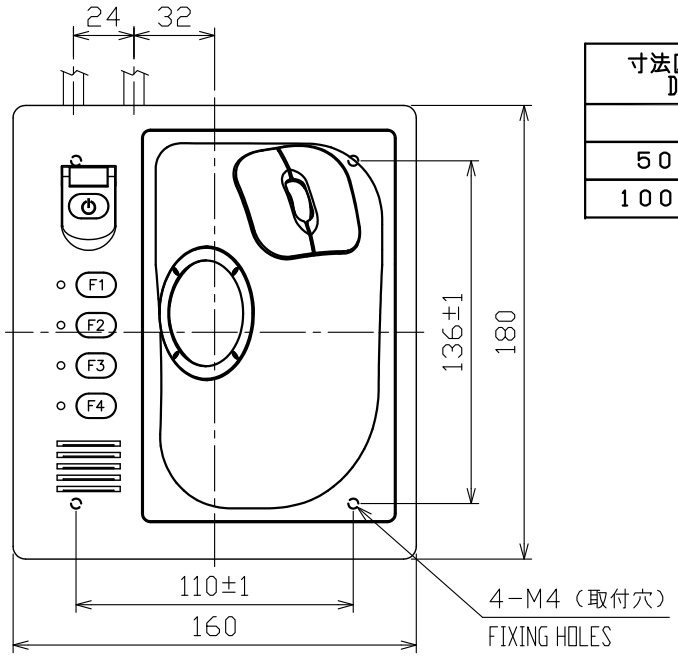

表1 TABLE 1

寸法区分（mm）DIMENSION	公差（mm）TOLERANCE
L≦50	±1.5
50<L≦100	±2.5
100<L≦500	±3

注 記 1）指定外の寸法公差は表1による。
2）#印寸法は最小サービス空間寸法とする。
3）取付用ネジはセムスB（M4×12）を使用のこと。
取付面板厚(t)は2≦t≦5とする。それ以外は、
ネジ長さを（t+7.8）±2とする。

NOTE 1. TABLE 1 INDICATES TOLERANCE OF DIMENSIONS WHICH IS NOT SPECIFIED.
2. #: MINIMUM SERVICE CLEARANCE.
3. USE M4x12 SCREWS FOR FIXING THE UNIT.
THICKNESS OF MOUNTING BOARD(t) SHOULD BE 2≦t≦5.
FOR THICKER ONE USE SCREW LENGTH: (t+7.8)±2.

DRAWN 8/Jun/2018 T.YAMASAKI		TITLE	RCU-015/015FEA
CHECKED 8/Jun/2018 H.MAKI		名称	操作部（卓上装備）
APPROVED 8/Jun/2018 H.MAKI	FCR-2117 SER. FAR-2117 SER.		外寸図
SCALE 1/3 MASS 2.4 ±10% kg	質量は10mケーブル重さを含む。MASS W/ 10m CABLE	NAME	CONTROL UNIT (DESKTOP MOUNT)
DWG.No. C3519-G13- D	REF. No. 03-163-785G-2		OUTLINE DRAWING

FURUNO ELECTRIC CO., LTD.

FURUNO

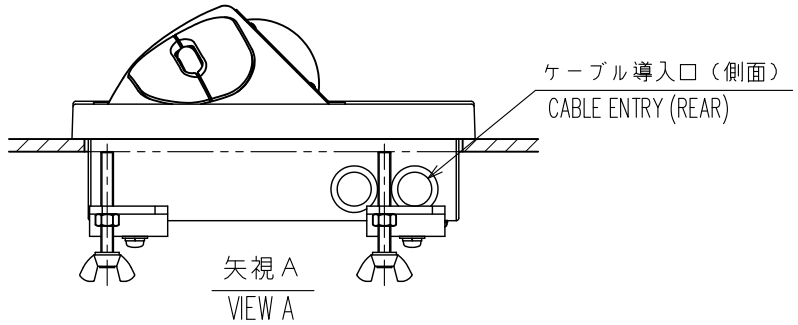

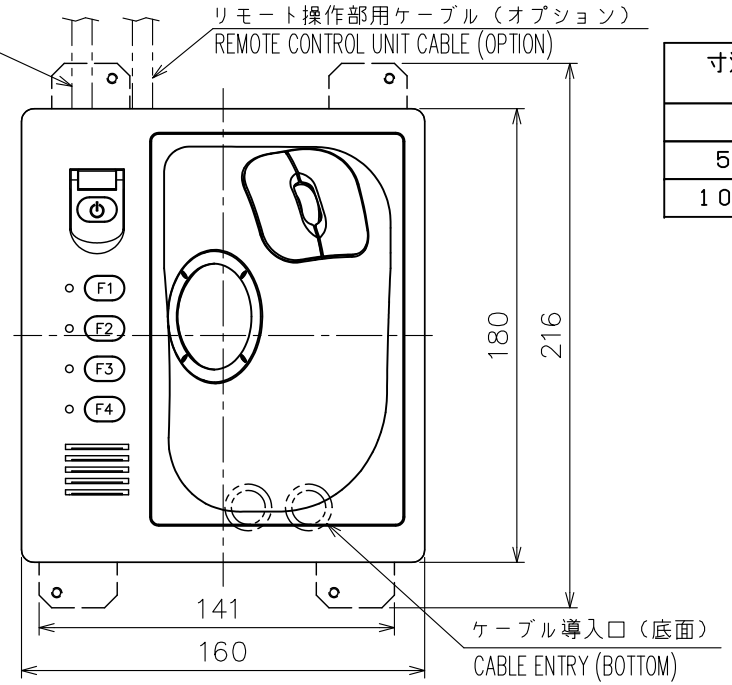

表1 TABLE 1

寸法区分（mm） DIMENSION	公差（mm） TOLERANCE
L≦50	±1.5
50<L≦100	±2.5
100<L≦500	±3

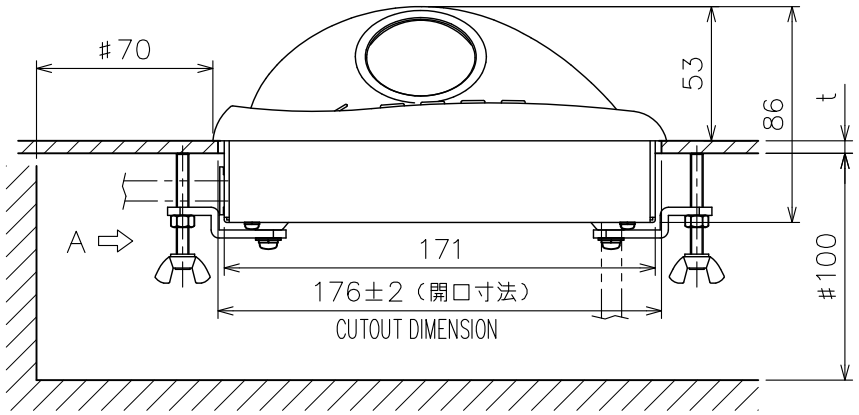

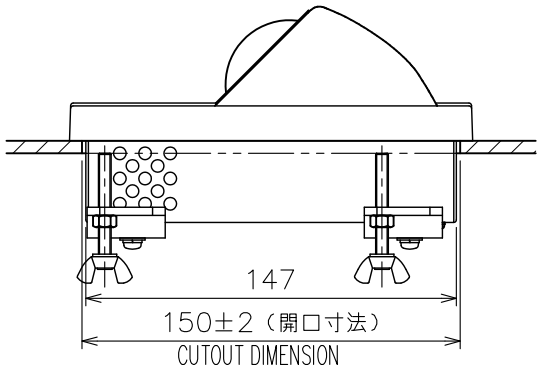

注 記 1） #印寸法は最小サービス空間寸法とする。
2） 指定外の寸法公差は表1による。
3） ケーブル導入口は側面・底面から選択のこと。
4） 取付面板厚（t）は最大10とする

NOTE 1. TABLE 1 INDICATES TOLERANCE OF DIMENSIONS WHICH IS NOT SPECIFIED.
2. #: MINIMUM SERVICE CLEARANCE.
3. SELECT CABLE ENTRY FROM REAR OR SIDE.
4. THICKNESS OF MOUNTING BOARD (t) SHOULD BE MAX. 10.

DRAWN 8/Jun/2018 T.YAMASAKI			TITLE RCU-015/015FEA
CHECKED 8/Jun/2018 H.MAKI			名称 操作部（埋込装備）
APPROVED 8/Jun/2018 H.MAKI		FCR-2117 SER. FAR-2117 SER.	外寸図
SCALE 1/3	MASS 2.5 ±10% kg	質量は10mケーブル重さを含む。 MASS INCLUDES 10m CABLE	NAME CONTROL UNIT (FLUSH MOUNT)
DWG.No. C3519-G14- E		03-163-786G-2	OUTLINE DRAWING

FURUNO ELECTRIC CO., LTD.

FURUNO

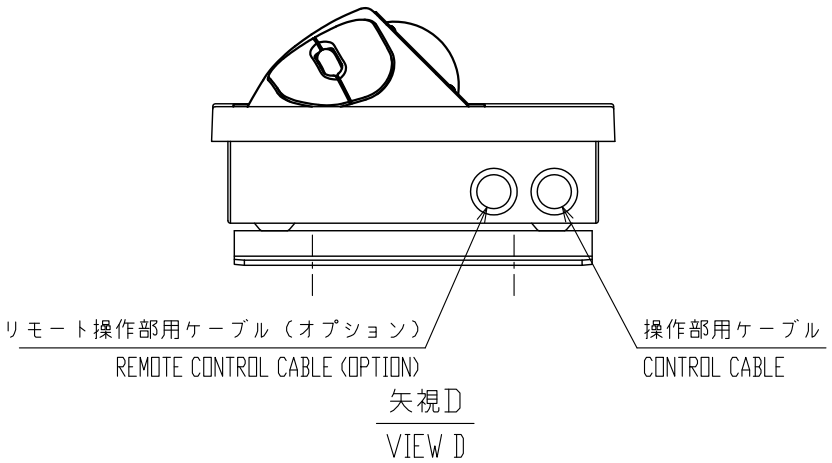

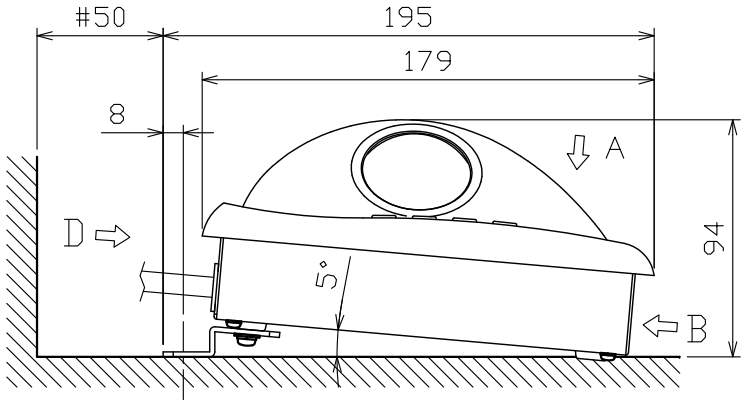

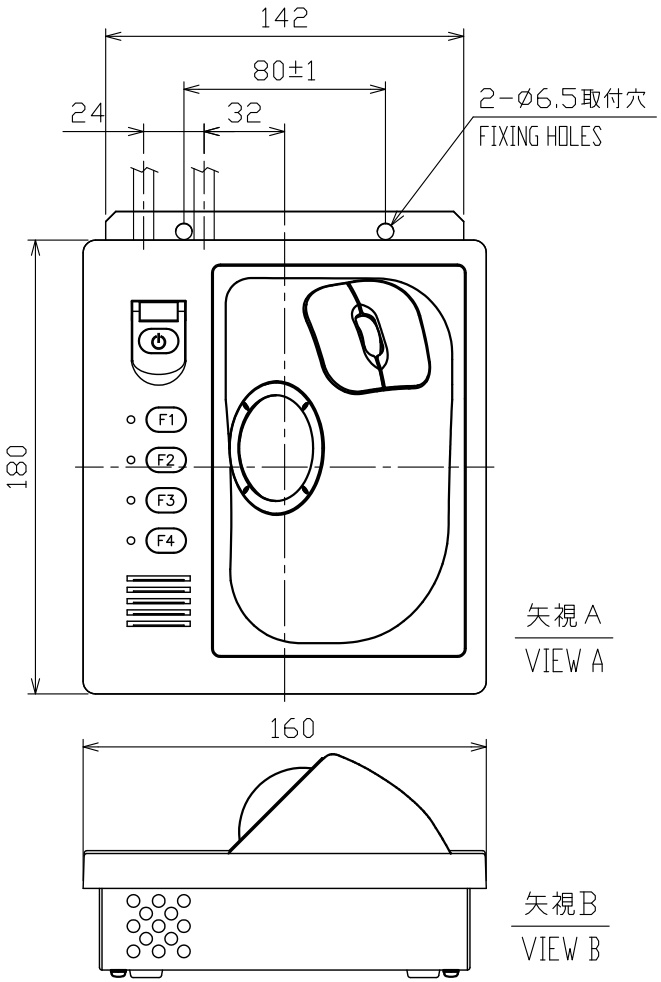

表1 TABLE 1

寸法区分（mm）DIMENSION	公差（mm）TOLERANCE
L≦50	±1.5
50<L≦100	±2.5
100<L≦500	±3

注　記

1）指定外の寸法公差は表1による。

2）#印寸法は最小サービス空間寸法とする。

3）取付にはトラスタッピンネジ呼び径6またはM6ボルトを使用のこと。

NOTE

1. TABLE 1 INDICATES TOLERANCE OF DIMENSIONS WHITCH IS NOT SPECIFIED.
2. #: MINIMUM SERVICE CLEARANCE.
3. USE TAPPING SCREWS φ6 OR M6 BOLTS FOR FIXING THE UNIT.

DRAWN 8/Jun/2018 T.YAMASAKI			TITLE RCU-015/015FEA
CHECKED 8/Jun/2018 H.MAKI			名称 操作部（取付金具装備）
APPROVED 8/Jun/2018 H.MAKI		FCR-2117 SER. FAR-2117 SER.	外寸図
SCALE 1/3	MASS 2.5 ±10% kg	質量は10mケーブル重さを含む。MASS W/ 10m CABLE	NAME CONTROL UNIT (TABLETOP MOUNT W/ FIXTURE)
DWG. No. C3519-G15- D		REF. No. 03-163-787G-1	OUTLINE DRAWING

FURUNO ELECTRIC CO., LTD.

FURUNO

表１ TABLE 1

寸法区分（ｍｍ） DIMENSIONS	公差（ｍｍ） TOLERANCE
L≦50	±1．5
50<L≦100	±2．5
100<L≦500	±3

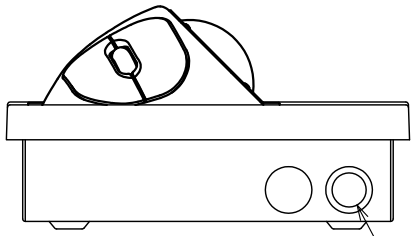

矢視A
VIEW A

操作部用ケーブル
CONTROL CABLE

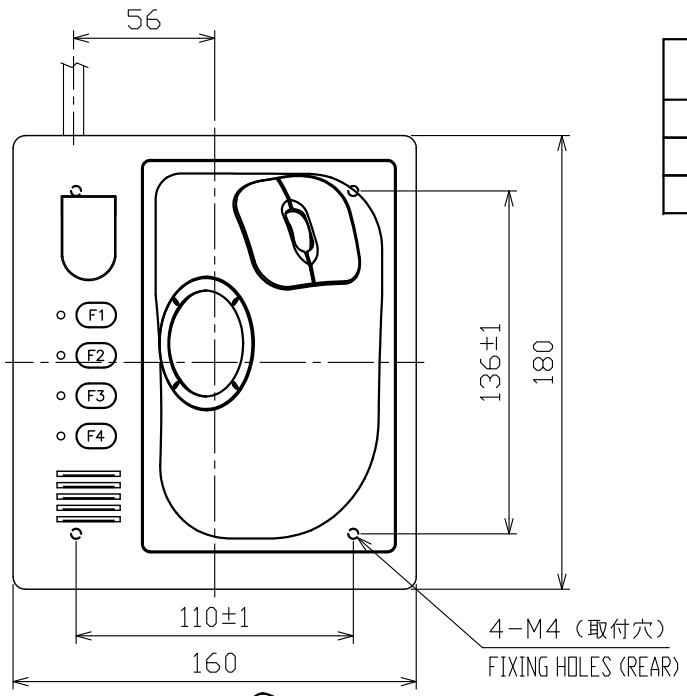

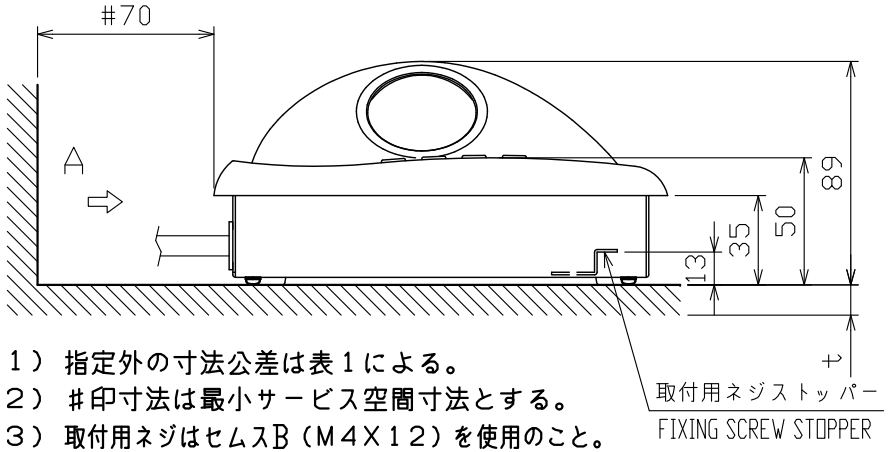

注 記 １） 指定外の寸法公差は表１による。
２） #印寸法は最小サービス空間寸法とする。
３） 取付用ネジはセムスB（M4X12）を使用のこと。
取付面板厚(t)は2≦t≦5とする。それ以外はネジ長さ（t＋7．8）±2
のセムスBを使用のこと。

NOTE 1. TABLE 1 INDICATES TOLERANCE OF DIMENSIONS WHICH IS NOT SPECIFIED.
2. #: MINIMUM SERVICE CLEARANCE.
3. USE M4x12 SCREWS FOR FIXING THE UNIT.
THICKNESS OF MOUNTING PANEL(t) SHOULD BE 2≦t≦5.
FOR USING GREATER THICKNESS, USE SCREW WHOSE LENGTH IS (t+7.8)±2.

DRAWN 8/Jun/2018 T.YAMASAKI		TITLE	RCU-016
CHECKED 8/Jun/2018 H. MAKI		名称	操作部（卓上装備）
APPROVED 8/Jun/2018 H.MAKI	FAR-2117 SER.		外寸図
SCALE 1/3 MASS 2.4 ±10% kg	質量は10mケーブルを含む。 MASS W/ 10m CABLE.	NAME	CONTROL UNIT (DESKTOP MOUNT)
DWG. No. C3519-G16- D	REF. No. 03-163-780G-4		OUTLINE DRAWING

FURUNO ELECTRIC CO., LTD.

FURUNO

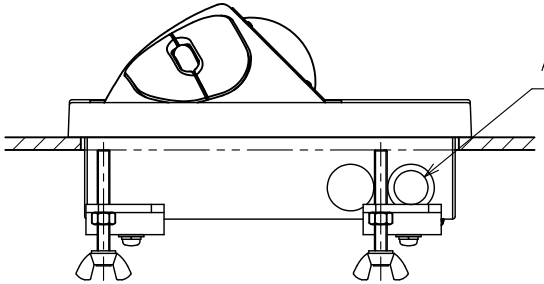

矢視A
VIEW A

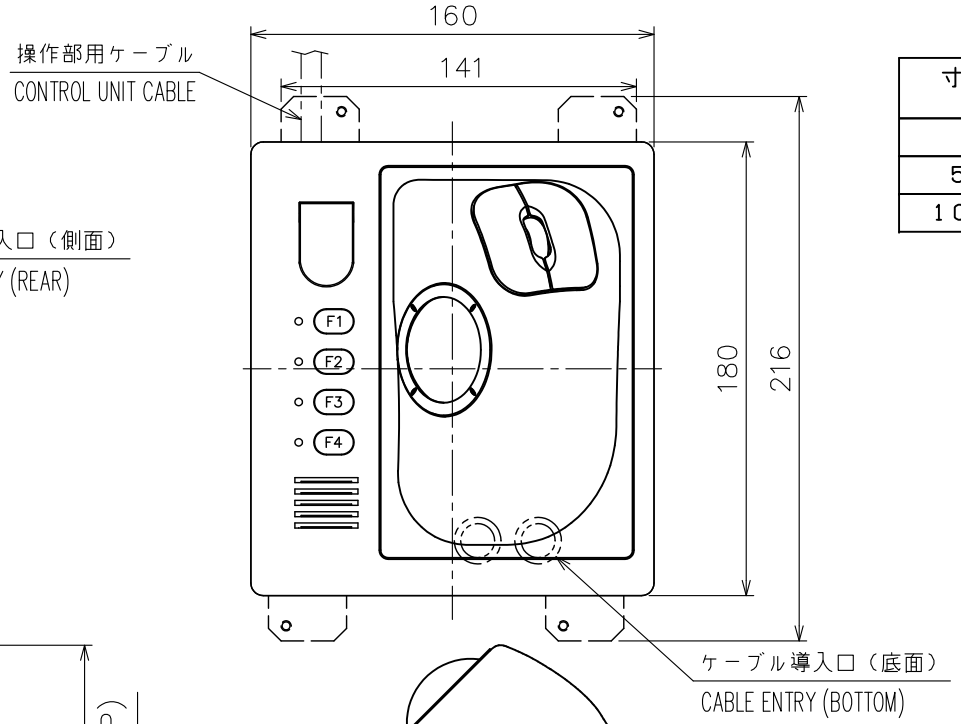

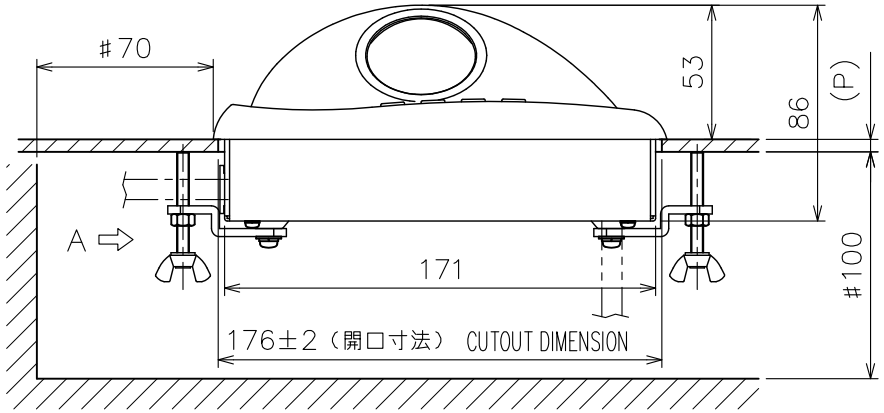

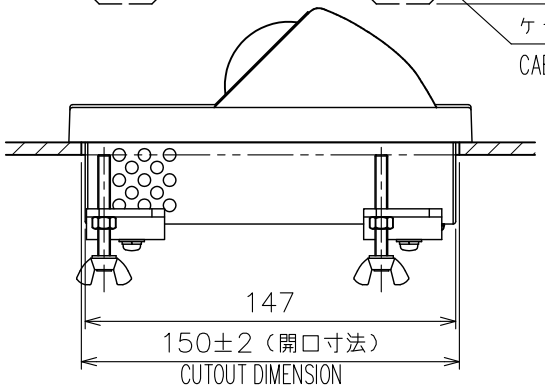

表1 TABLE 1

寸法区分（mm） DIMENSIONS	公差（mm） TOLERANCE
L≦50	±1.5
50<L≦100	±2.5
100<L≦500	±3

注　記
1）指定外の寸法公差は表1による。
2）#印寸法は最小サービス空間寸法とする。
3）ケーブル導入口は側面・底面から選択のこと。
4）壁の厚さ（P）は最大10とする

NOTE
1. TABLE 1 INDICATES TOLERANCE OF DIMENSIONS WHICH IS NOT SPECIFIED.
2. #: MINIMUM SERVICE CLEARANCE.
3. SELECT CABLE ENTRY FROM REAR OR SIDE.
4. THICKNESS OF PANEL (P): 10 mm MAX.

DRAWN 8/Jun/2018 T.YAMASAKI		TITLE	RCU-016
CHECKED 8/Jun/2018 H.MAKI		名称	操作部（埋込装備）
APPROVED 8/Jun/2018 H.MAKI	FAR-2117 SER.		外寸図
SCALE 1/3 MASS 2.5 ±10% kg	質量は10mケーブルを含む。 MASS W/ 10m CABLE	NAME	CONTROL UNIT (FLUSH MOUNT)
DWG.No. C3519-G11- E	REF.No. 03-163-781G-4		OUTLINE DRAWING

FURUNO ELECTRIC CO., LTD.

FURUNO

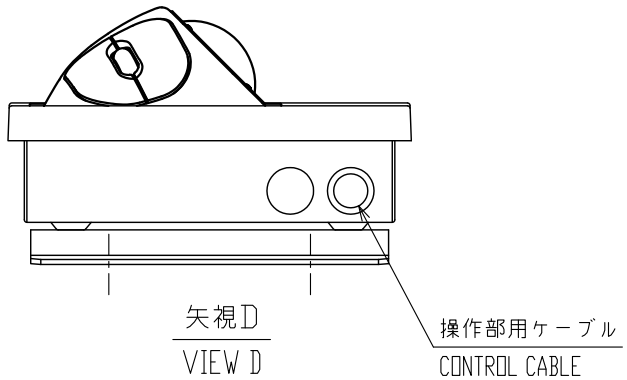

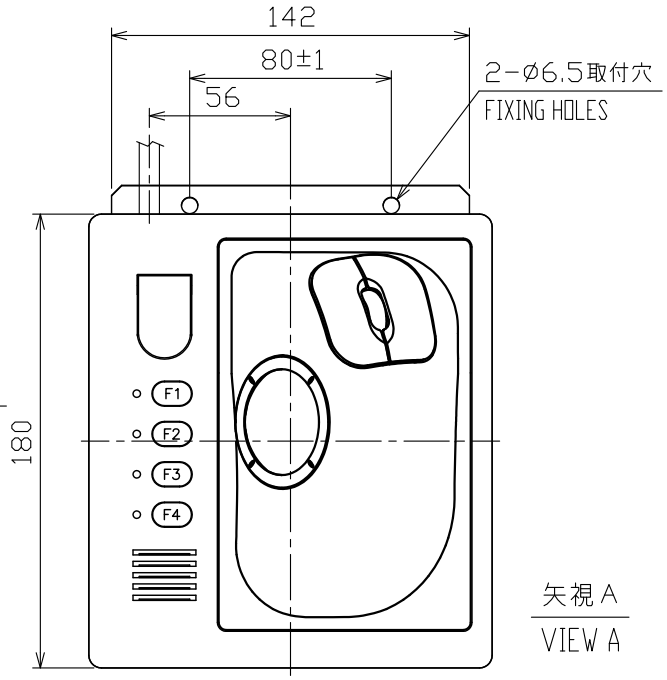

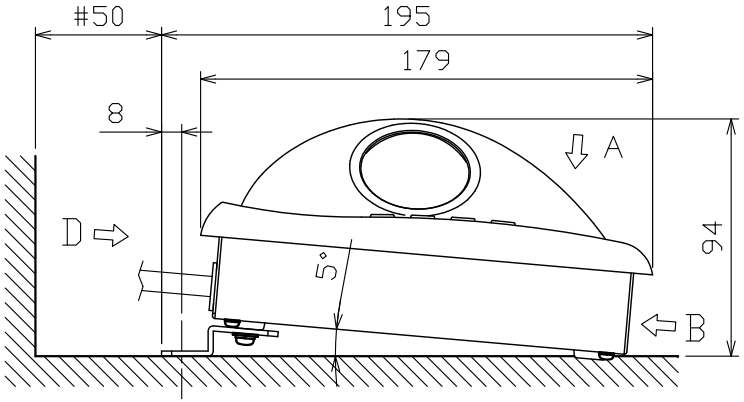

表1 TABLE 1

寸法区分（mm）DIMENSIONS	公差（mm）TOLERANCE
L≦50	±1.5
50<L≦100	±2.5
100<L≦500	±3

注　記

1）指定外の寸法公差は表1による。

2）#印寸法は最小サービス空間寸法とする。

3）取付用ネジはトラスタッピンネジ呼び径6、またはM6ボルトを使用のこと。

NOTE

1. TABLE 1 INDICATES TOLERANCE OF DIMENSIONS WHICH IS NOT SPECIFIED.
2. #: MINIMUM SERVICE CLEARANCE.
3. USE TAPPING SCREWS φ6 OR M6 BOLTS FOR FIXING THE UNIT.

DRAWN 8/Jun/2018 T.YAMASAKI		TITLE	RCU-016
CHECKED 8/Jun/2018 H.MAKI		名称	操作部（取付金具装備）
APPROVED 8/Jun/2018 H.MAKI	FAR-2117 SER.		外寸図
SCALE 1/3 MASS 2.5 ±10% kg	質量は10mケーブル重さを含む。MASS W/ 10m CABLE	NAME	CONTROL UNIT (TABLETOP MOUNT W/ FIXTURE)
DWG. No. C3519-G12- D	REF. No. 03-163-782G-2		OUTLINE DRAWING

FURUNO ELECTRIC CO., LTD.

FURUNO

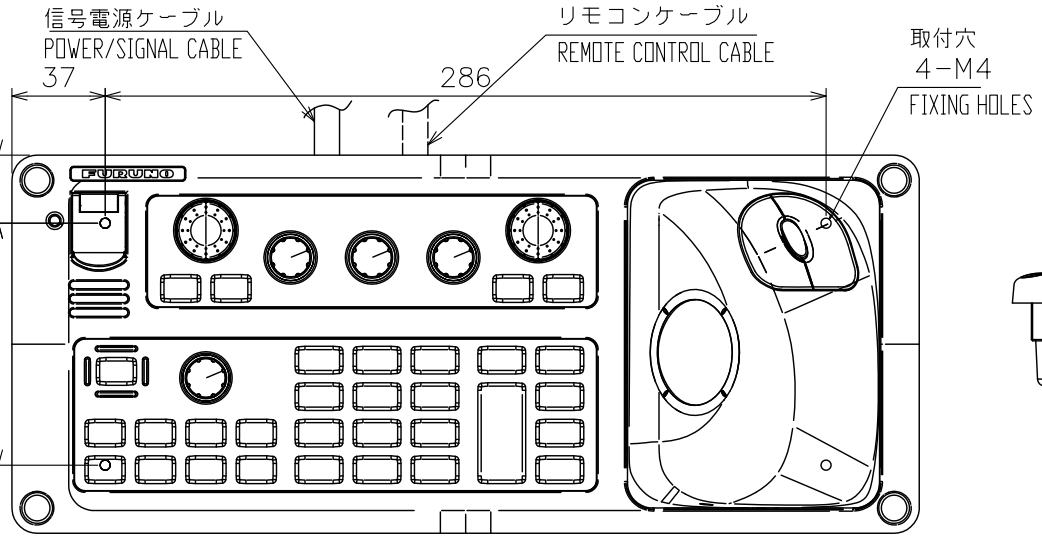

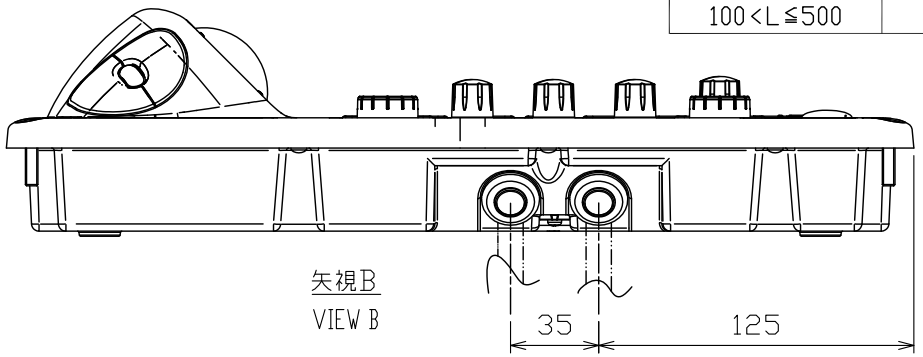

表1 TABLE 1

寸法区分（mm） DIMENSION	公差（mm） TOLERANCE
L≦50	±1.5
50<L≦100	±2.5
100<L≦500	±3

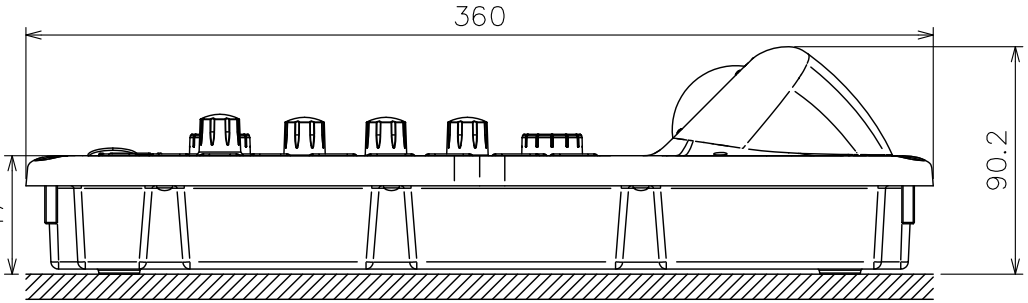

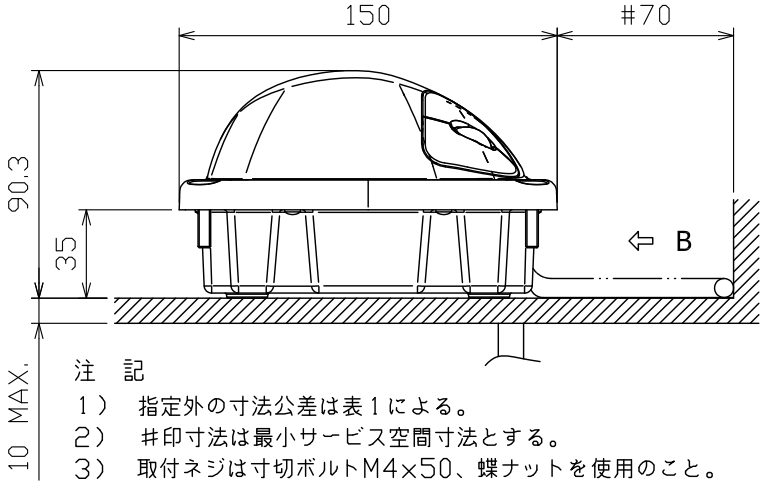

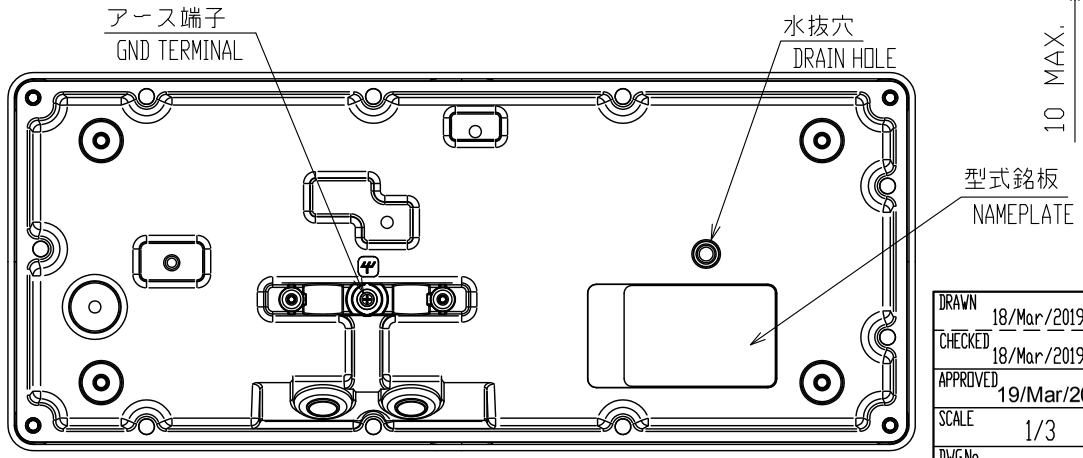

注　記

1）　指定外の寸法公差は表1による。

2）　#印寸法は最小サービス空間寸法とする。

3）　取付ネジは寸切ボルトM4×50、蝶ナットを使用のこと。

NOTE

1. TABLE 1 INDICATES TOLERANCE OF DIMENSIONS WHICH IS NOT SPECIFIED.
2. #: MINIMUM SERVICE CLEARANCE.
3. USE STUD BOLTS M4x50 AND WING NUTS FOR FIXING THE UNIT.

DRAWN 18/Mar/2019 T.YAMASAKI		TITLE	RCU-031
CHECKED 18/Mar/2019 H.MAKI		名称	操作部（卓上装備）
APPROVED 19/Mar/2019 H.MAKI	FAR-2x58		外寸図
SCALE 1/3	MASS 2.2 ±10% kg　質量はケーブル（10m）を含む。MASS INCLUDES 10m CABLE.	NAME	CONTROL UNIT (TABLETOP MOUNT)
DWG.No. C3672-G06- B	REF.No. 03-195-200G-1		OUTLINE DRAWING

FURUNO ELECTRIC CO., LTD.

FURUNO

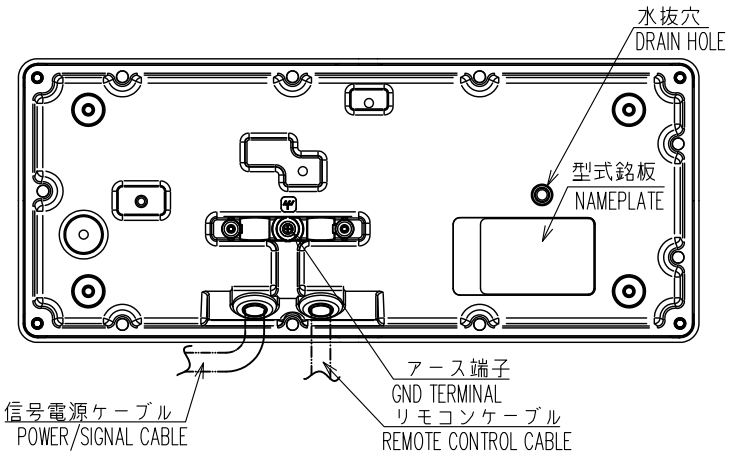

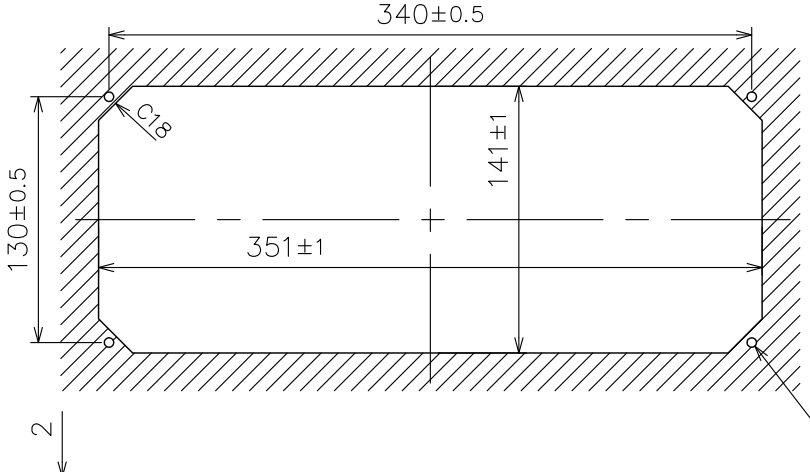

表1 TABLE 1

寸法区分（mm） DIMENSION	公差（mm） TOLERANCE
L≦50	±1.5
50<L≦100	±2.5
100<L≦500	±3

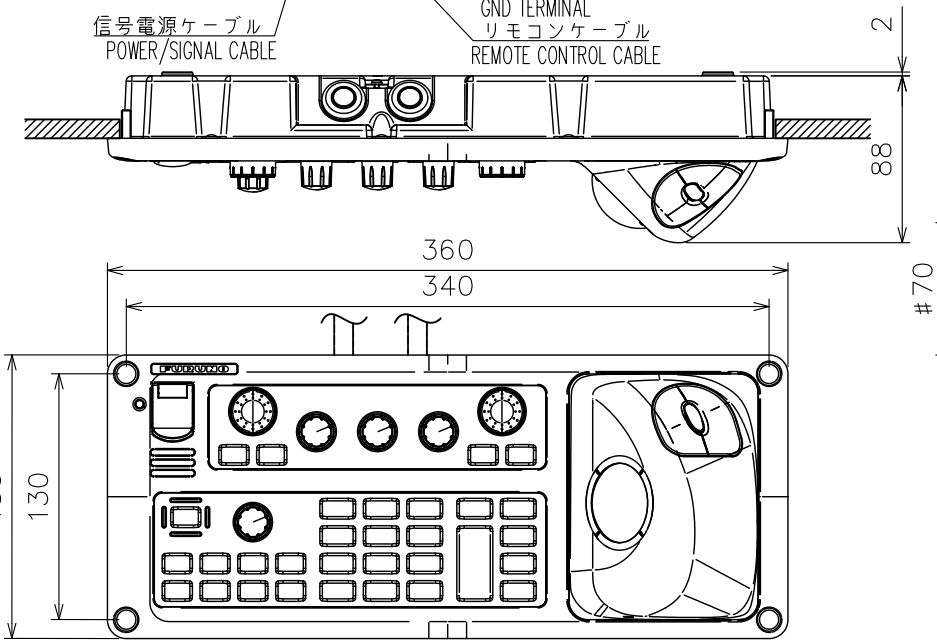

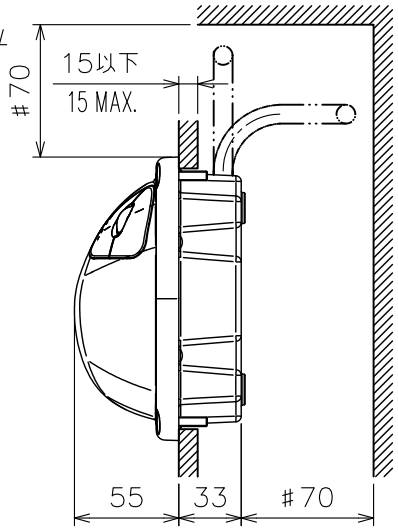

注記
1）指定外の寸法公差は表１による。
2）＃印寸法は最小サービス空間寸法とする。
3）取付ネジはトラスタッピンネジ呼び径５×２０を使用のこと。

NOTE
1. TABLE 1 INDICATES TOLERANCE OF DIMENSIONS WHICH IS NOT SPECIFIED.
2. #: MINIMUM SERVICE CLEARANCE.
3. USE TAPPING SCREWS ø5x20 FOR FIXING THE UNIT.

DRAWN 18/Mar/2019 T.YAMASAKI		TITLE	RCU-031
CHECKED 18/Mar/2019 H.MAKI		名称	操作部（埋込装備）
APPROVED 19/Mar/2019 H.MAKI	FAR-2x58		外寸図
SCALE 1/4 MASS 2.2 ±10% kg	質量はケーブル（10m）を含む。 MASS INCLUDES 10m CABLE.	NAME	CONTROL UNIT (FLUSH MOUNT)
DWG.No. C3672-G04- B	REF.No. 03-195-210G-1		OUTLINE DRAWING

FURUNO ELECTRIC CO., LTD.

FURUNO

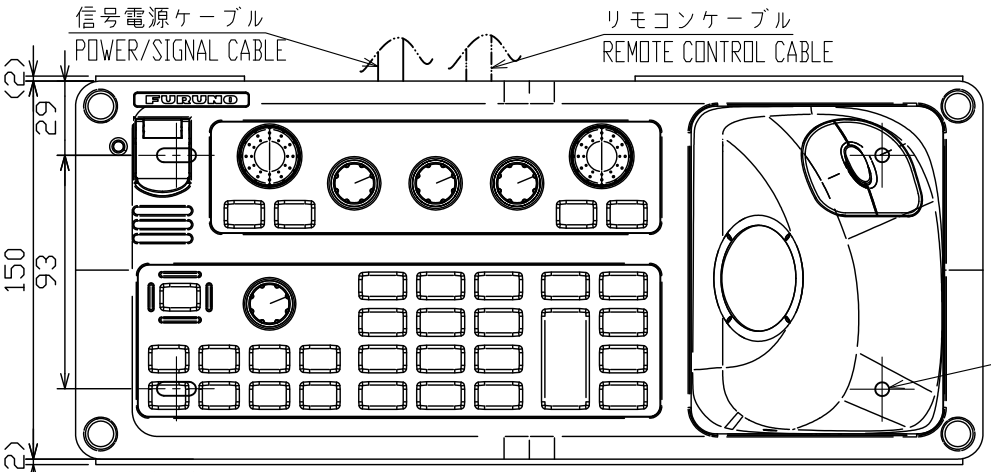

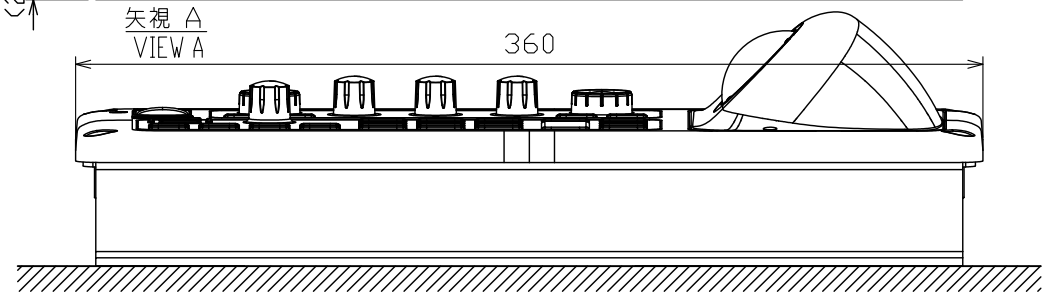

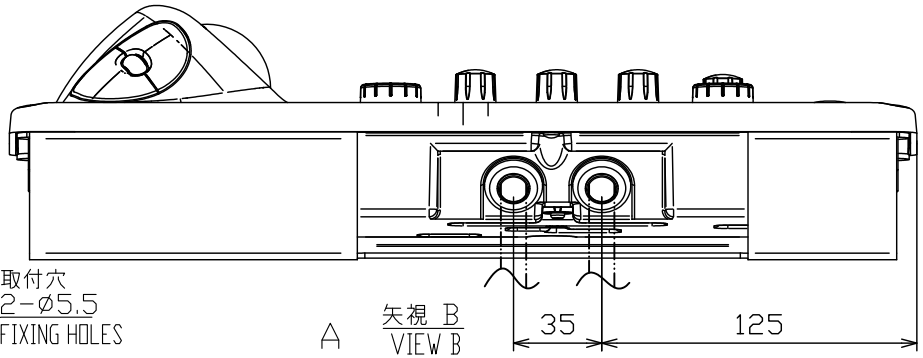

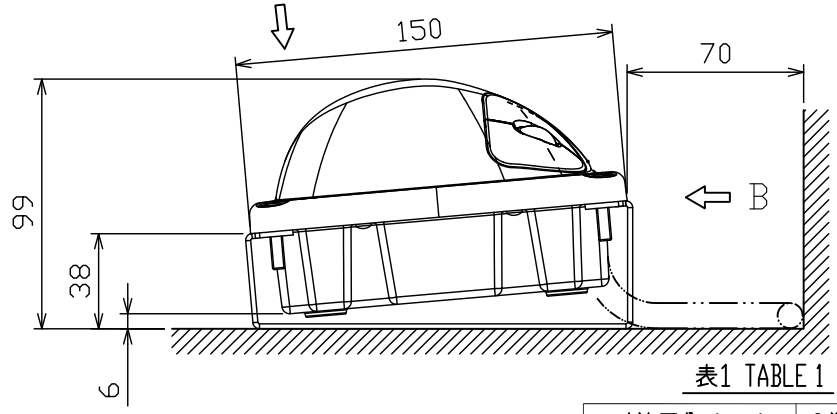

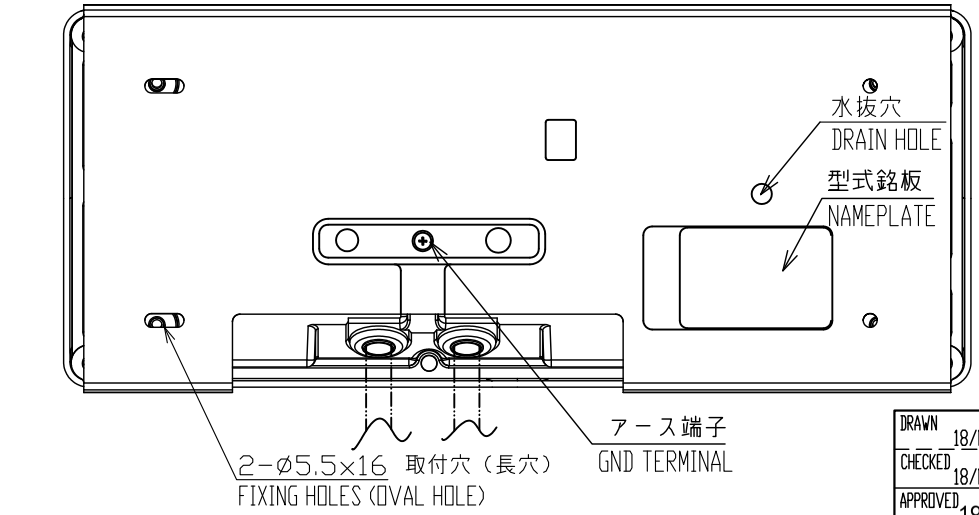

表1 TABLE 1

寸法区分（mm）DIMENSION	公差（mm）TOLERANCE
L≦50	±1.5
50<L≦100	±2.5
100<L≦500	±3

注記
1）指定外の寸法公差は表１による。
2）＃印寸法は最小サービス空間寸法とする。
3）取付ネジはトラスタッピンネジ呼び径５×２０を使用のこと。

NOTE
1. TABLE 1 INDICATES TOLERANCE OF DIMENSIONS WHICH IS NOT SPECIFIED.
2. #: MINIMUM SERVICE CLEARANCE.
3. USE TAPPING SCREWS ø5x20 FOR FIXING THE UNIT.

DRAWN 18/Mar/2019 T.YAMASAKI		TITLE	RCU-031
CHECKED 18/Mar/2019 H.MAKI		名称	操作部（取付金具）
APPROVED 19/Mar/2019 H.MAKI	FAR-2x58		外寸図
SCALE 1/3	MASS 3.3 ±10% kg 質量はケーブル（10m）を含む。MASS INCLUDES 10m CABLE.	NAME	CONTROL UNIT (FIXTURE MOUNT)
DWG.No. C3672-G05-C	REF.No. 03-195-220G-1		OUTLINE DRAWING

FURUNO ELECTRIC CO., LTD.

FURUNO

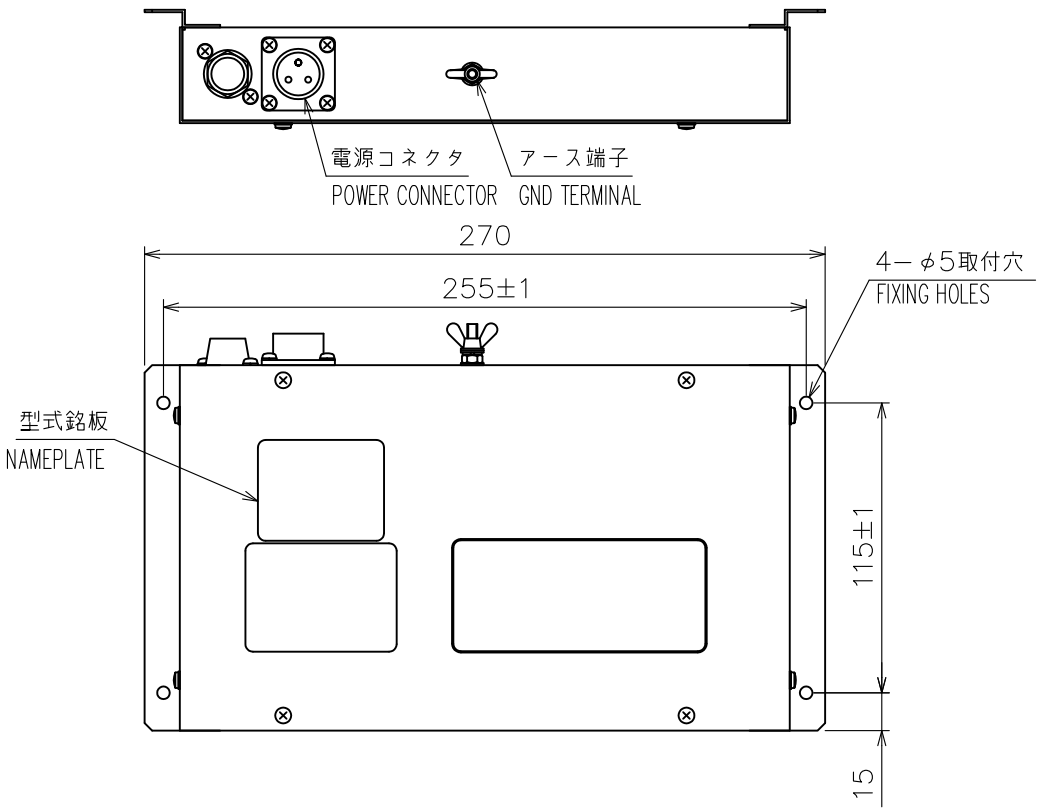

表１　TABLE 1

寸法区分（ｍｍ） DIMENSIONS	公差（ｍｍ） TOLERANCE
Ｌ≦５０	±１．５
５０＜Ｌ≦１００	±２．５
１００＜Ｌ≦５００	±３

注　記

１）　指定外寸法公差は表１による

２）　＃印寸法は最小サービス空間寸法とする

３）　取付用ネジはトラスタッピンネジ呼び径４×１６を使用のこと

NOTE

1. TABLE 1 INDICATES TOLERANCE OF DIMENSIONS WHICH IS NOT SPECIFIED.
2. #: MINIMUM SERVICE CLEARANCE.
3. USE TAPPING SCREWS ø4x16 FOR FIXING THE UNIT.

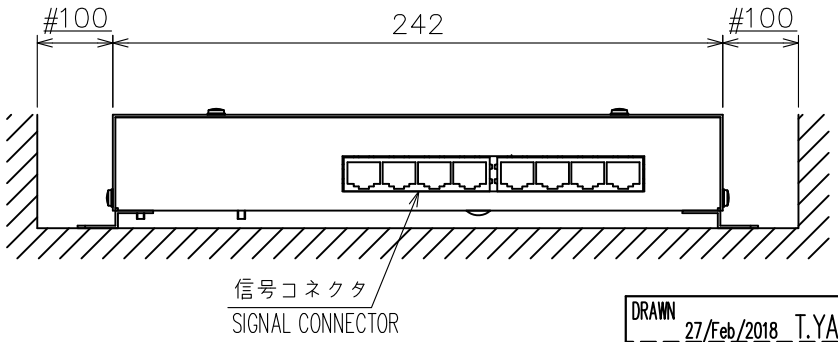

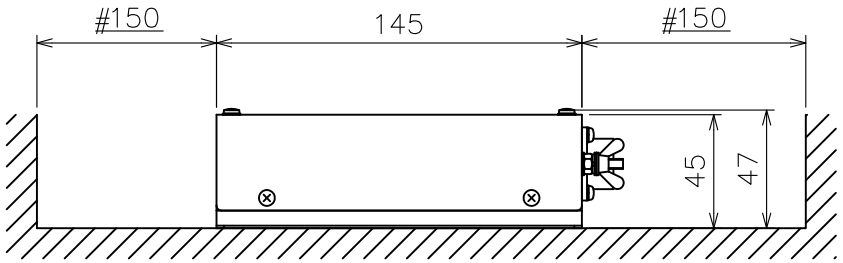

DRAWN 27/Feb/2018 T.YAMASAKI		TITLE	HUB-100
CHECKED 27/Feb/2018 H.MAKI		名称	イーサネットスイッチングハブ
APPROVED 28/Feb/2018 H.MAKI			外寸図
SCALE 1/3	MASS 1.5 ±10% kg	NAME	SWITCHING HUB
DWG. No. C3519-G18- C	REF. No. 03-163-960G-4		OUTLINE DRAWING

FURUNO ELECTRIC CO., LTD.

FURUNO

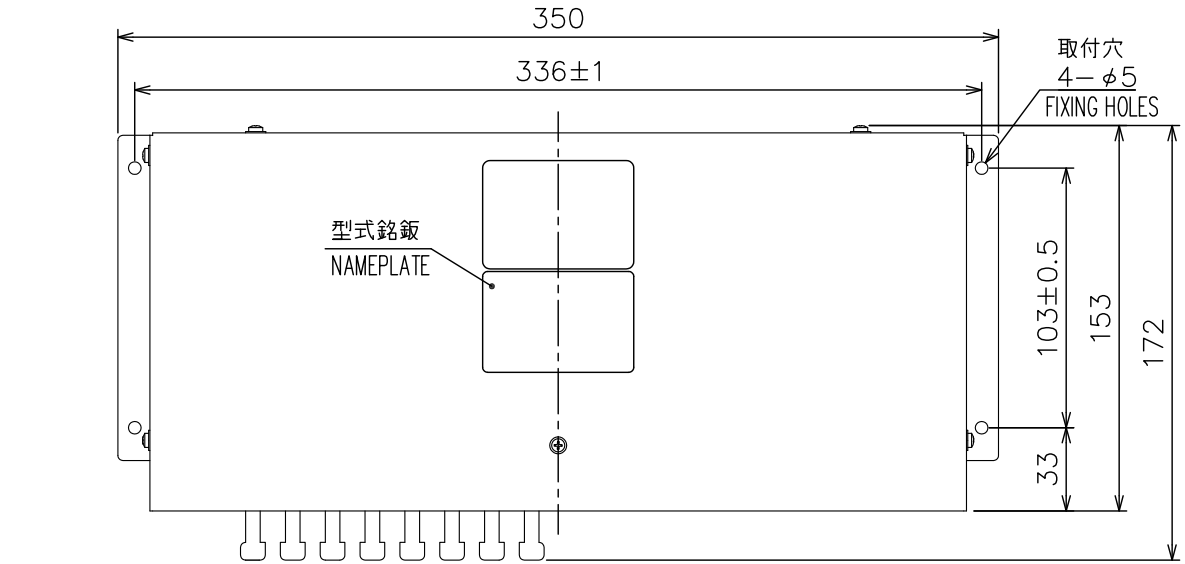

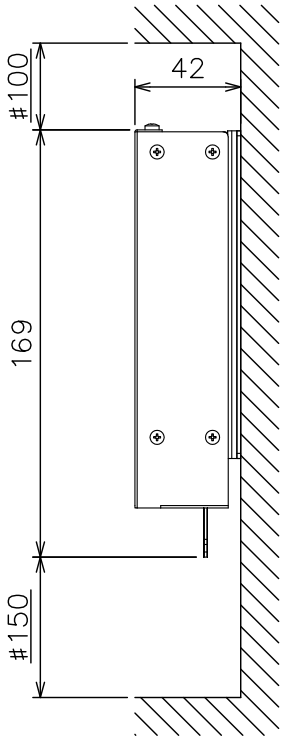

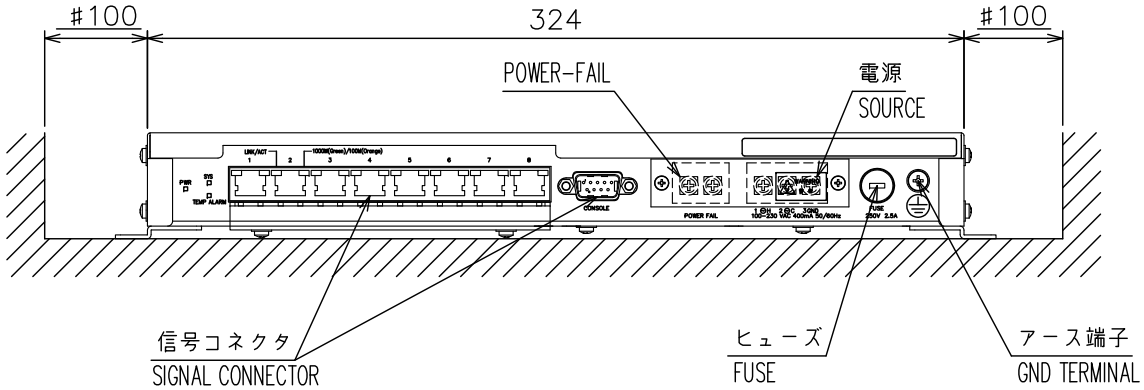

表1 TABLE 1

寸法区分（mm）DIMENSION	公差（mm）TOLERANCE
L≦50	±1.5
50<L≦100	±2.5
100<L≦500	±3

注 記 1） 指定外の寸法公差は表１による。
2） #印寸法は最小サービス空間寸法とする。
3） 取付用ネジはトラスタッピンネジ呼び径４×２０を使用のこと。

NOTE 1. TABLE 1 INDICATES TOLERANCE OF DIMENSIONS WHICH IS NOT SPECIFIED.
2. #: MINIMUM SERVICE CLEARANCE.
3. USE TAPPING SCREWS ø4x20 FOR FIXING THE UNIT.

DRAWN 8/Jun/2018 T.YAMASAKI		TITLE	HUB-3000
CHECKED 8/Jun/2018 H.MAKI		名称	インテリジェントハブ
APPROVED 8/Jun/2018 H.MAKI	FMD-3200		外寸図
SCALE 1/3	MASS 1.5 ±10% kg 質量はケーブルを含まず。MASS DOES NOT INCLUDE CABLE.	NAME	INTELLIGENT HUB
DWG. No. C4473-G12- C	REF. No. 24-014-350G-2		OUTLINE DRAWING

FURUNO ELECTRIC CO., LTD.

FURUNO

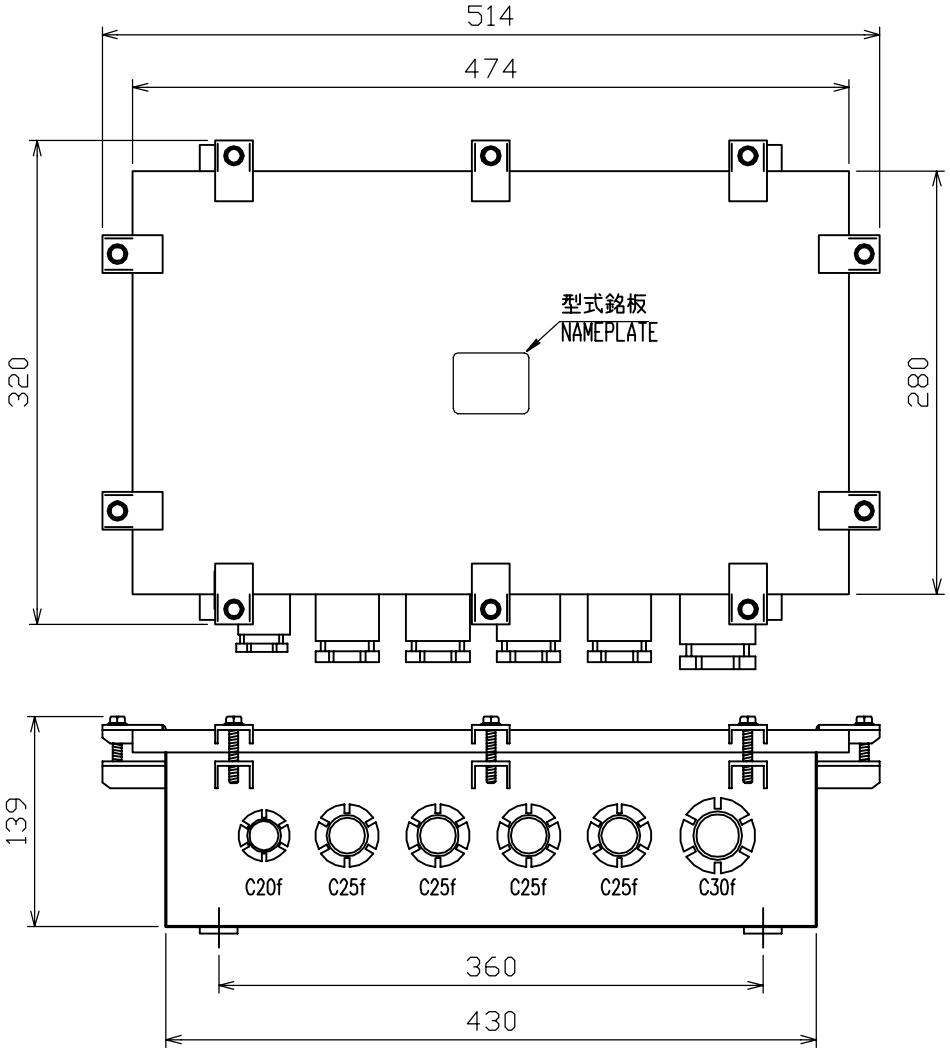

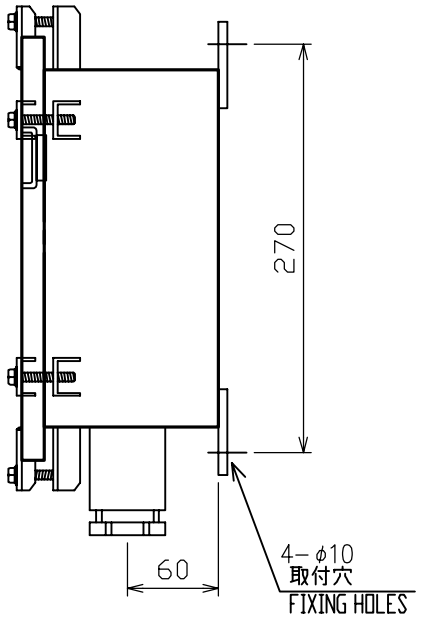

表1 TABLE 1

寸法区分(mm) DIMENSIONS	公差(mm) TOLERANCE
0 < L ≦ 50	±1.5
50 < L ≦ 100	±2.5
100 < L ≦ 500	±3
500 < L ≦ 1000	±4

注記 1）寸法公差は表1による。

NOTE 1. TABLE 1 INDICATES TOLERANCE OF DIMENSIONS.

DRAWN Dec. 2, '04 E. MIYOSHI		TITLE	RJB-001
CHECKED TAKAHASHI. T		名称	接続箱
APPROVED Y. Hatai	FAR-2107/2807		外寸図
SCALE 1/5 MASS 12 ±10% kg		NAME	JUNCTION BOX
DWG.No. C3519-G31- A			OUTLINE DRAWING

FURUNO ELECTRIC CO., LTD.

FURUNO

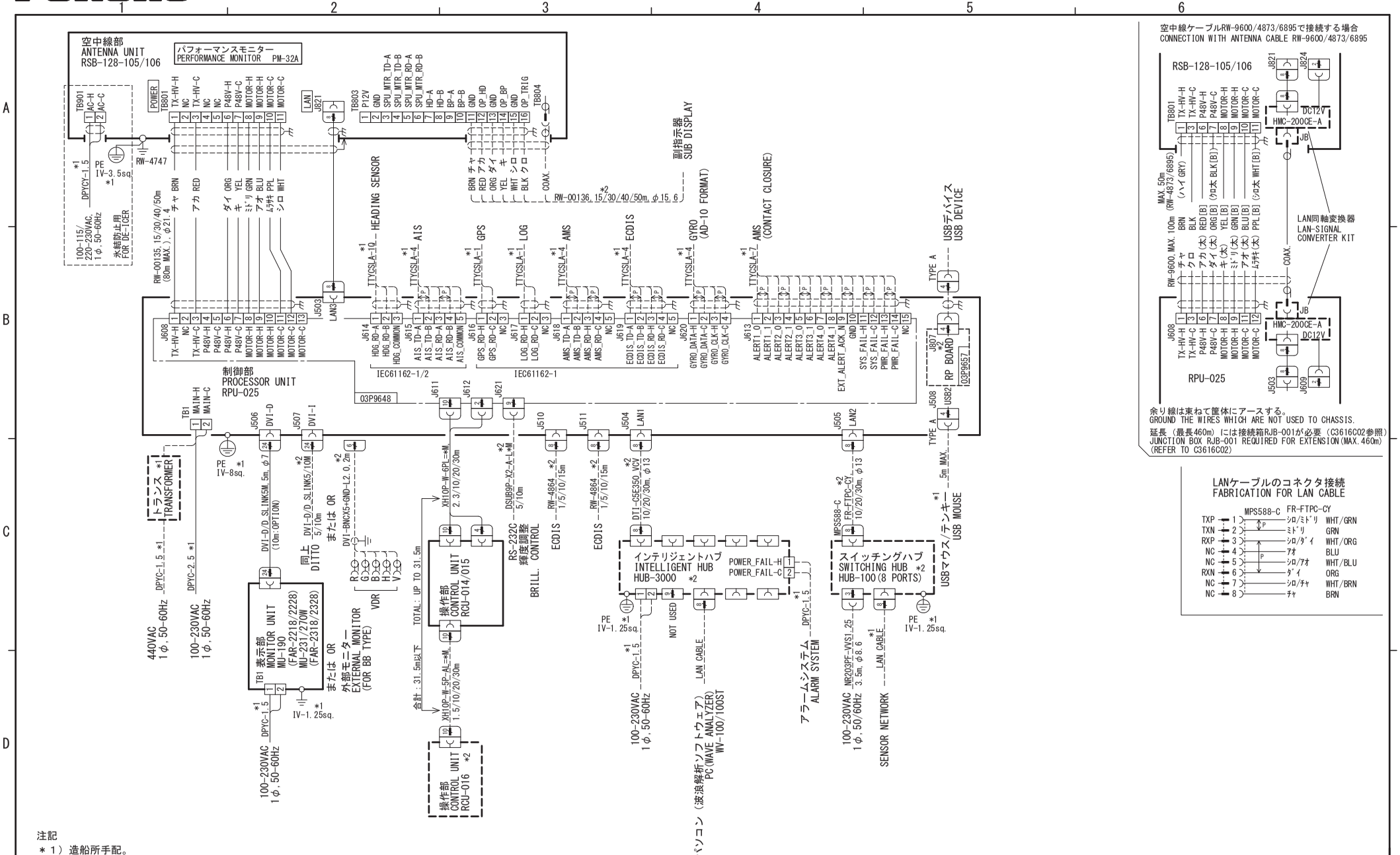

注記
＊1）造船所手配。
＊2）オプション。

NOTE
*1: SHIPYARD SUPPLY
*2: OPTION

DRAWN 1/Nov/2019 T. YAMASAKI		TYPE	FAR-2218/2228(-BB), FAR-2318/2328
CHECKED 1/Nov/2019 H. MAKI		名称	航海用レーダー
APPROVED 5/Nov/2019 H.MAKI			相互結線図
SCALE / MASS kg		NAME	MARINE RADAR
DWG. No. C3652-C01- K	REF. No. 03-193-7002-1		INTERCONNECTION DIAGRAM

FURUNO ELECTRIC CO., LTD.

S-1

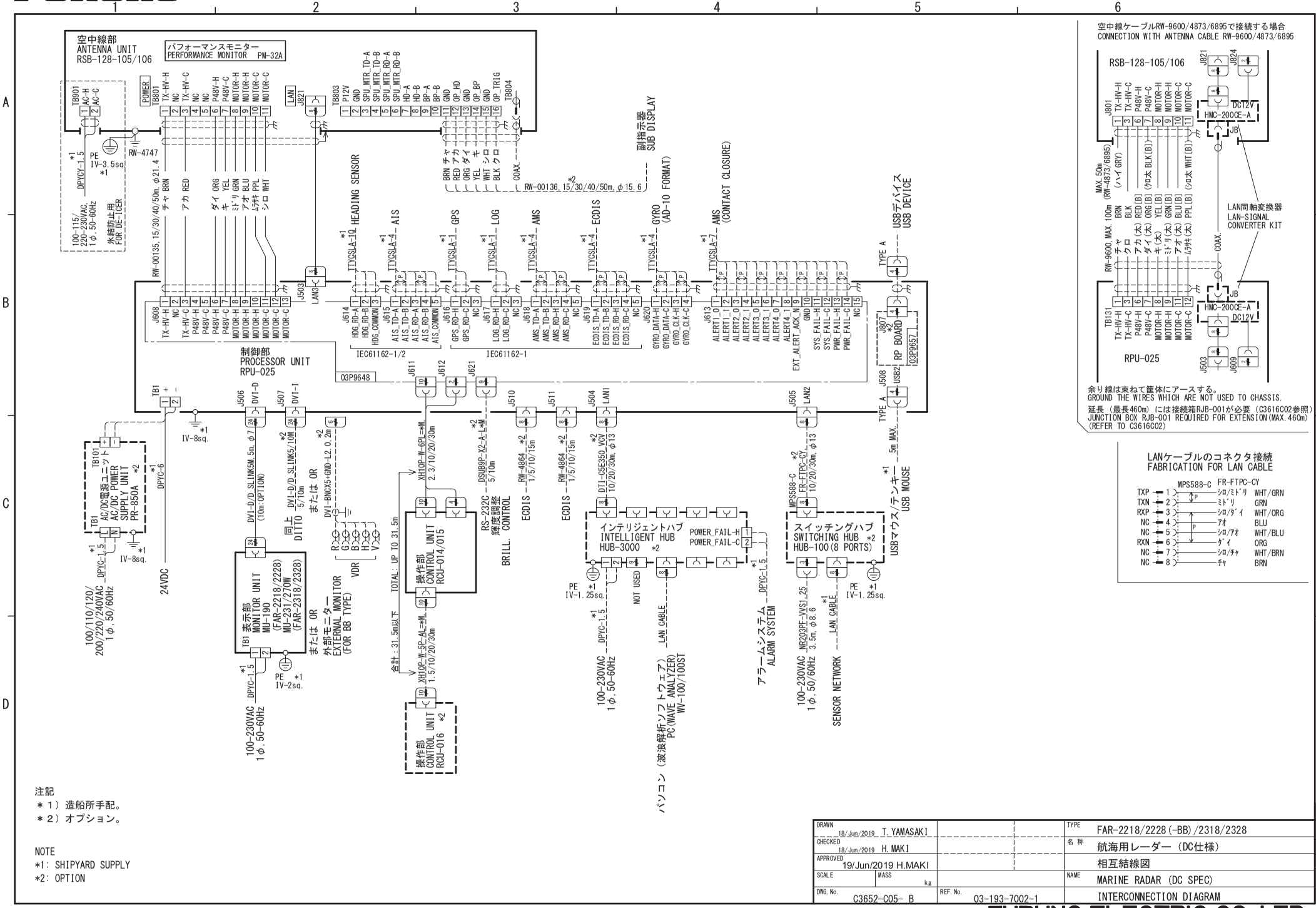

注記
＊1）造船所手配。
＊2）オプション。

NOTE
*1: SHIPYARD SUPPLY
*2: OPTION

DRAWN 18/Jun/2019 T. YAMASAKI		TYPE	FAR-2218/2228(-BB)/2318/2328
CHECKED 18/Jun/2019 H. MAKI		名称	航海用レーダー（DC仕様）
APPROVED 19/Jun/2019 H.MAKI			相互結線図
SCALE / MASS kg		NAME	MARINE RADAR (DC SPEC)
DWG. No. C3652-C05- B	REF. No. 03-193-7002-1		INTERCONNECTION DIAGRAM

FURUNO ELECTRIC CO., LTD.

FURUNO

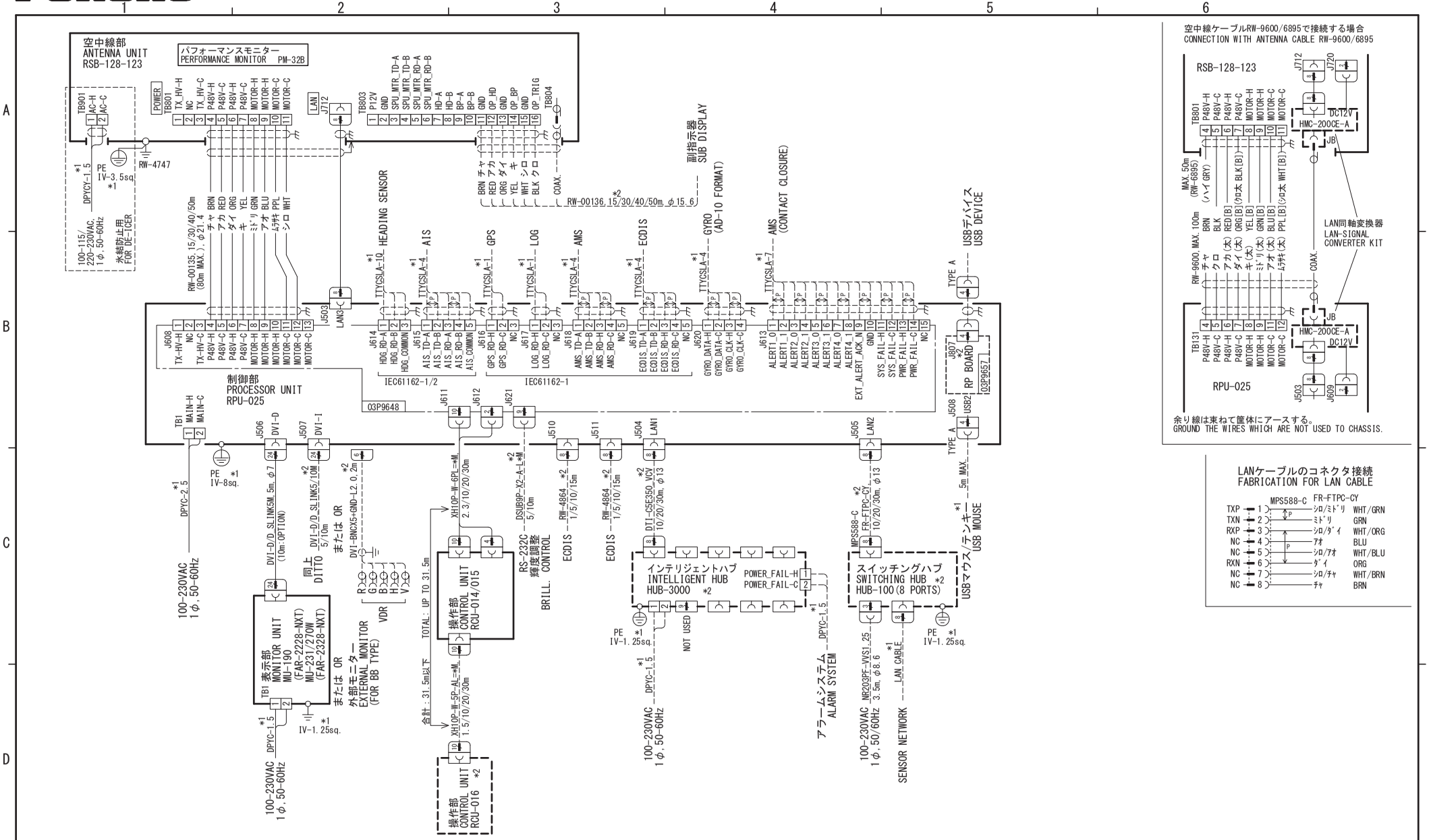

注記
＊1）造船所手配。
＊2）オプション。

NOTE
*1: SHIPYARD SUPPLY
*2: OPTION

DRAWN 1/Nov/2019 T. YAMASAKI		TYPE	FAR-2228-NXT(-BB)/2328-NXT
CHECKED 1/Nov/2019 H. MAKI		名称	航海用レーダー
APPROVED 7/Nov/2019 H.MAKI			相互結線図
SCALE / MASS kg		NAME	MARINE RADAR
DWG. No. C3679-C01- A	REF. No. 03-199-6002-0		INTERCONNECTION DIAGRAM

牧宏昌

FURUNO ELECTRIC CO., LTD.

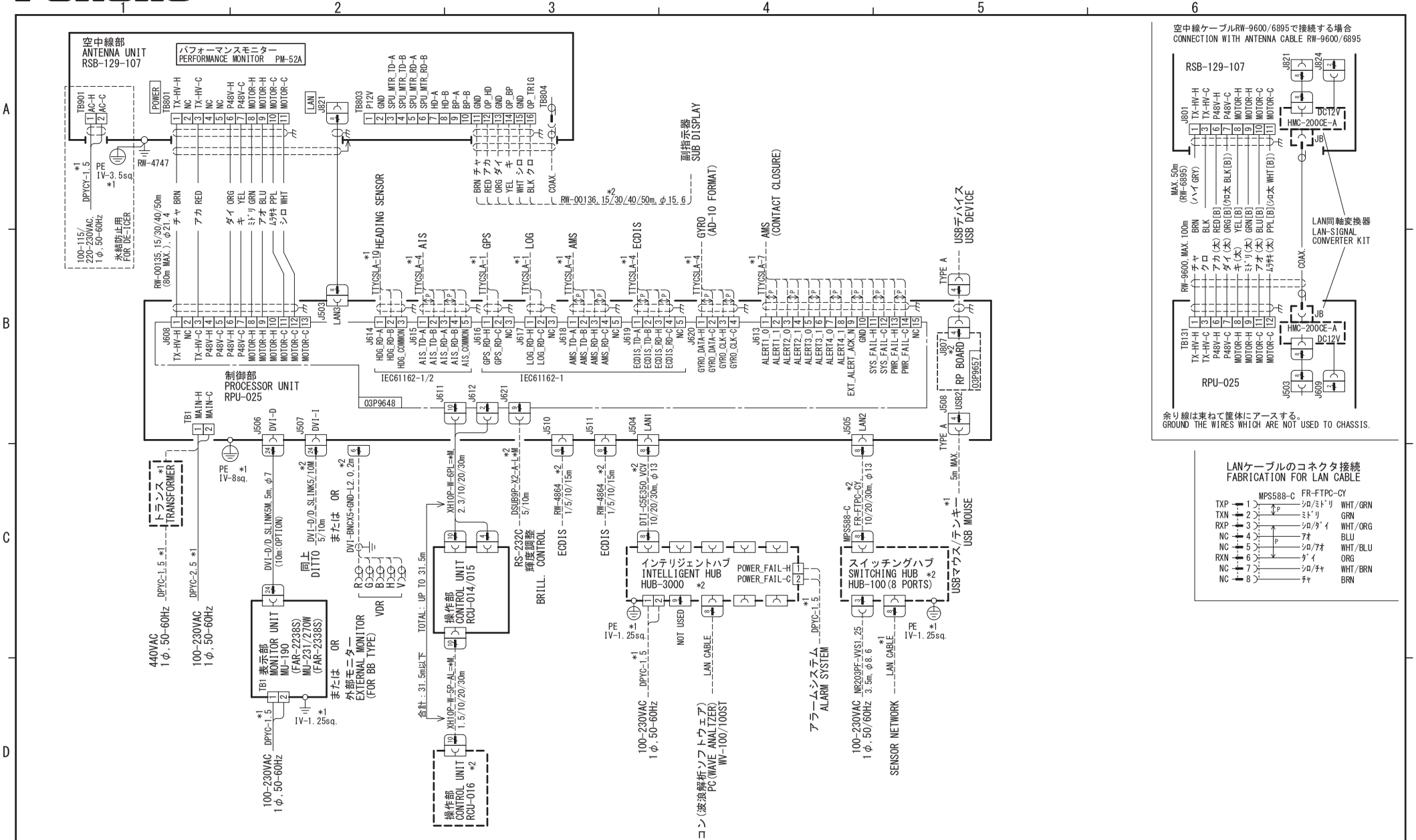

注記
＊1）造船所手配。
＊2）オプション。

NOTE
*1: SHIPYARD SUPPLY
*2: OPTION

DRAWN 19/Jun/2019 T. YAMASAKI		TYPE	FAR-2238S(-BB)/2338S
CHECKED 19/Jun/2019 H. MAKI		名称	航海用レーダー
APPROVED 24/Jun/2019 H.MAKI			相互結線図
SCALE / MASS kg		NAME	MARINE RADAR
DWG. No. C3656-C01- J	REF. No. 03-193-7008-0		INTERCONNECTION DIAGRAM

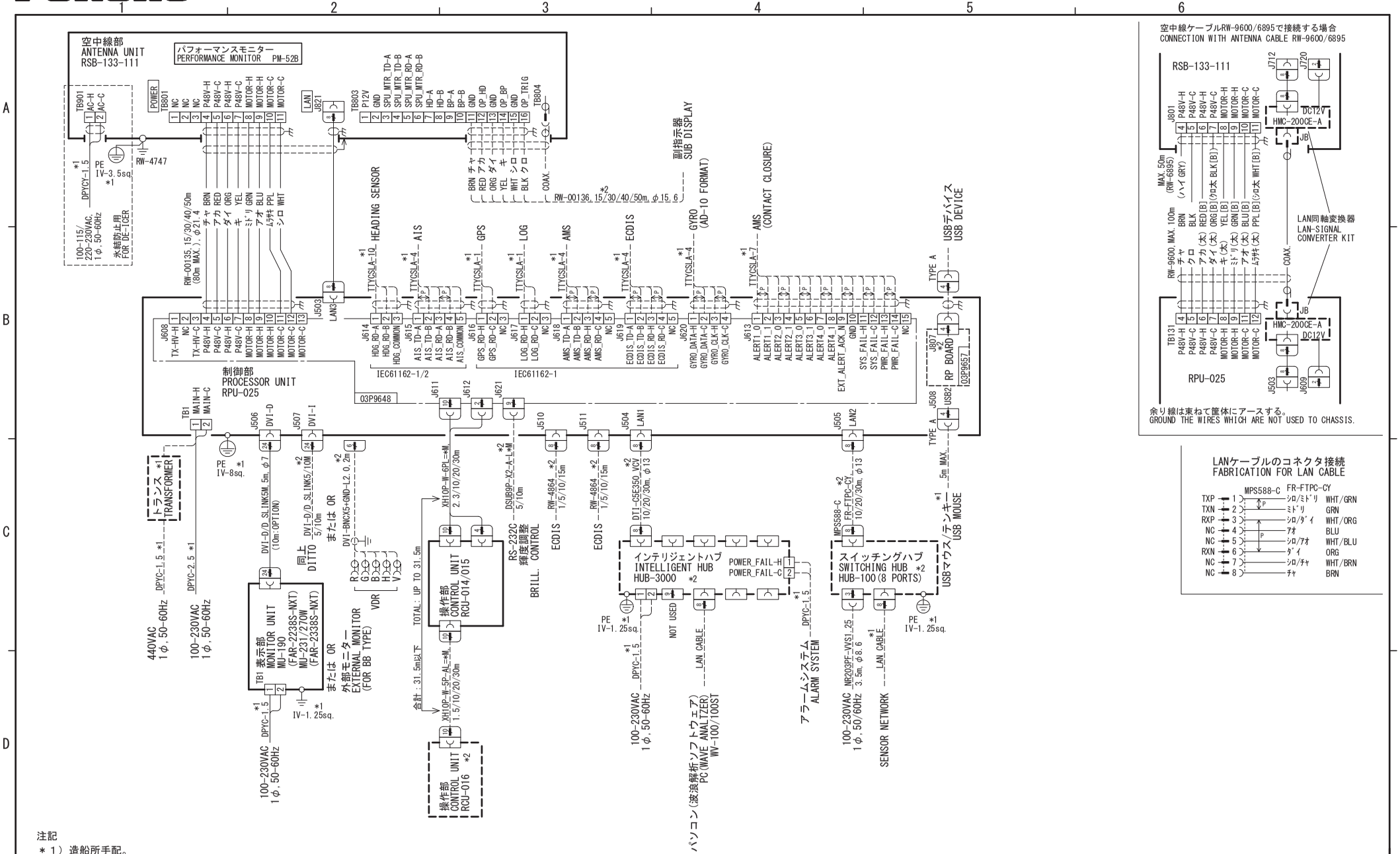

注記
＊1）造船所手配。
＊2）オプション。

NOTE
*1: SHIPYARD SUPPLY
*2: OPTION

DRAWN 21/Jun/2019 T. YAMASAKI		TYPE	FAR-2238S-NXT(-BB)/2338S-NXT
CHECKED 21/Jun/2019 H. MAKI		名称	航海用レーダー
APPROVED 24/Jun/2019 H.MAKI			相互結線図
SCALE / MASS kg		NAME	MARINE RADAR
DWG. No. C3665-C01- J	REF. No. 03-193-7014-0		INTERCONNECTION DIAGRAM

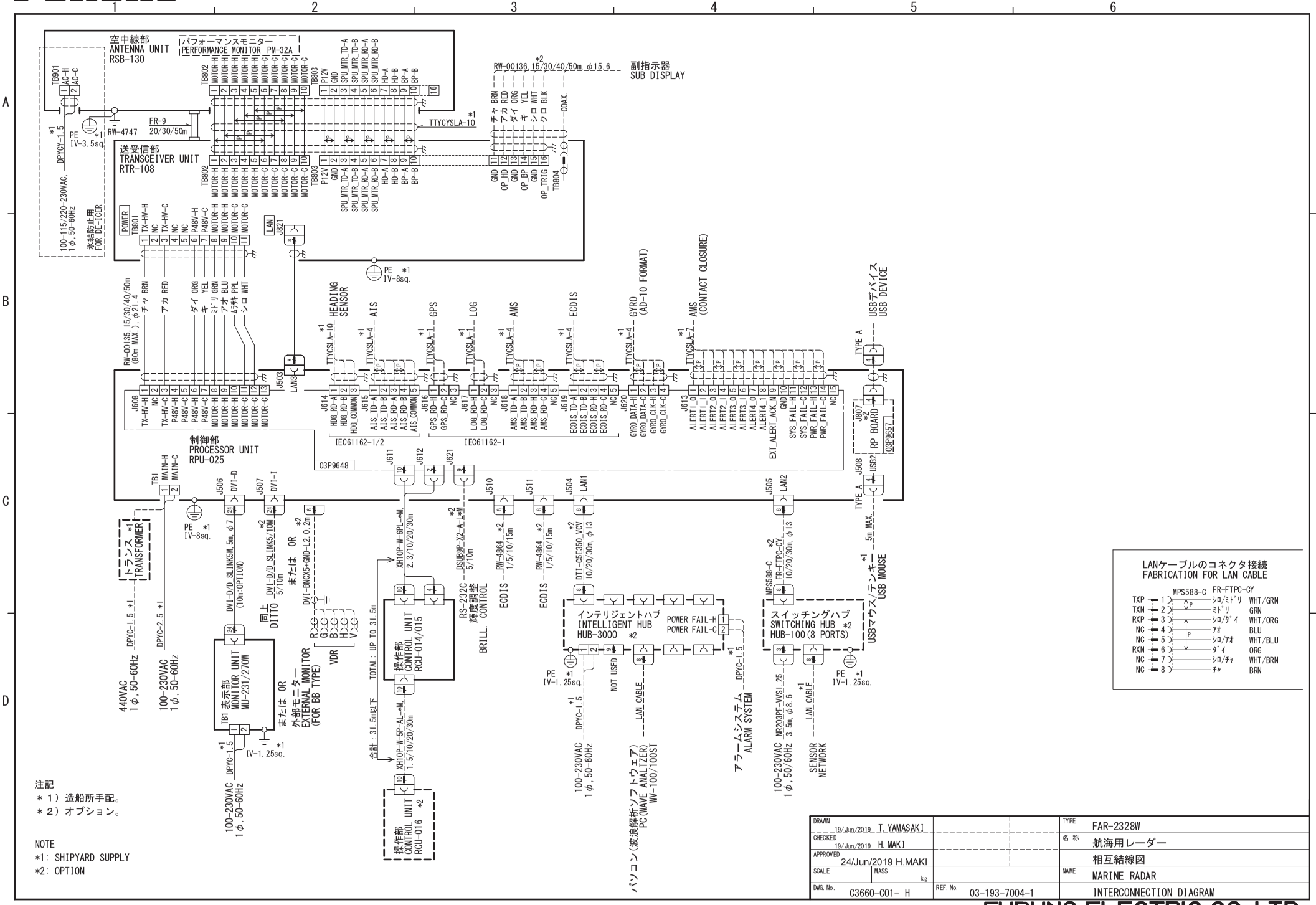

注記
＊1）造船所手配。
＊2）オプション。

NOTE
*1: SHIPYARD SUPPLY
*2: OPTION

DRAWN 19/Jun/2019 T. YAMASAKI		TYPE	FAR-2328W
CHECKED 19/Jun/2019 H. MAKI		名称	航海用レーダー
APPROVED 24/Jun/2019 H.MAKI			相互結線図
SCALE / MASS kg		NAME	MARINE RADAR
DWG. No. C3660-C01- H	REF. No. 03-193-7004-1		INTERCONNECTION DIAGRAM

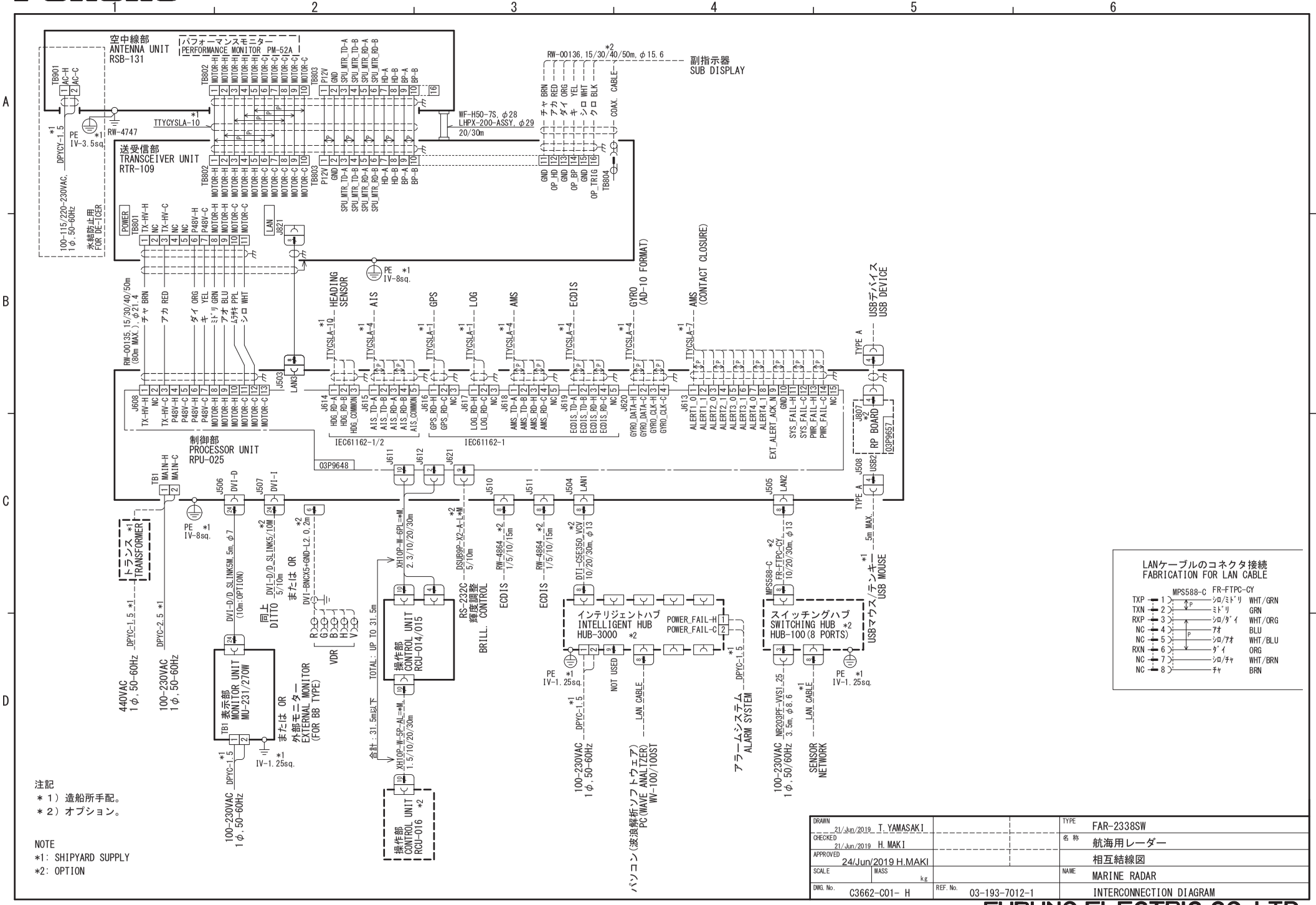

注記
＊1）造船所手配。
＊2）オプション。

NOTE
*1: SHIPYARD SUPPLY
*2: OPTION

DRAWN 21/Jun/2019 T. YAMASAKI		TYPE	FAR-2338SW
CHECKED 21/Jun/2019 H. MAKI		名称	航海用レーダー
APPROVED 24/Jun/2019 H.MAKI			相互結線図
SCALE / MASS kg		NAME	MARINE RADAR
DWG. No. C3662-C01- H	REF. No. 03-193-7012-1		INTERCONNECTION DIAGRAM

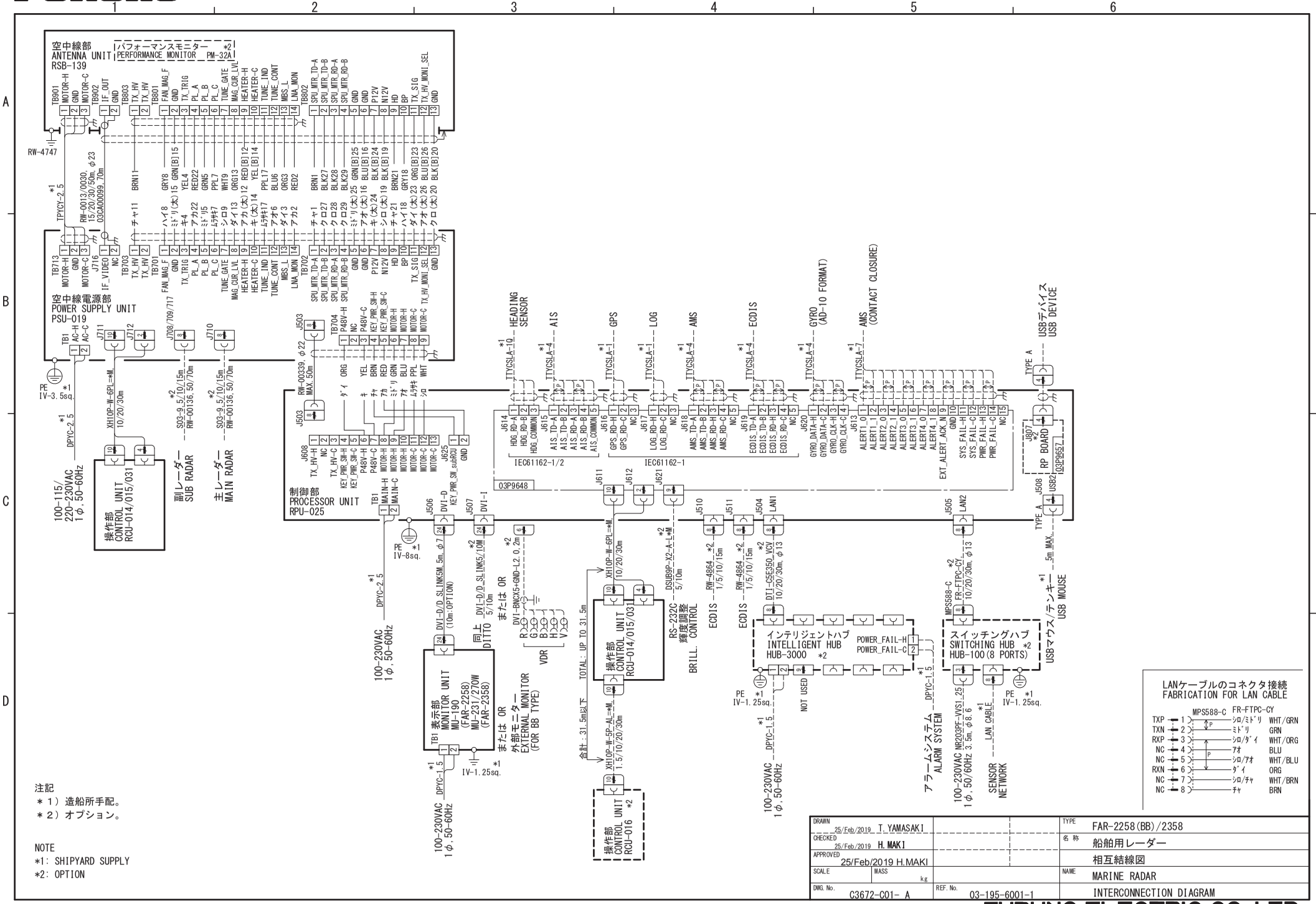

注記
＊1）造船所手配。
＊2）オプション。

NOTE
*1: SHIPYARD SUPPLY
*2: OPTION

DRAWN 25/Feb/2019 T. YAMASAKI		TYPE	FAR-2258(BB)/2358
CHECKED 25/Feb/2019 H. MAKI		名称	船舶用レーダー
APPROVED 25/Feb/2019 H.MAKI			相互結線図
SCALE / MASS kg		NAME	MARINE RADAR
DWG. No. C3672-C01- A	REF. No. 03-195-6001-1		INTERCONNECTION DIAGRAM

FURUNO

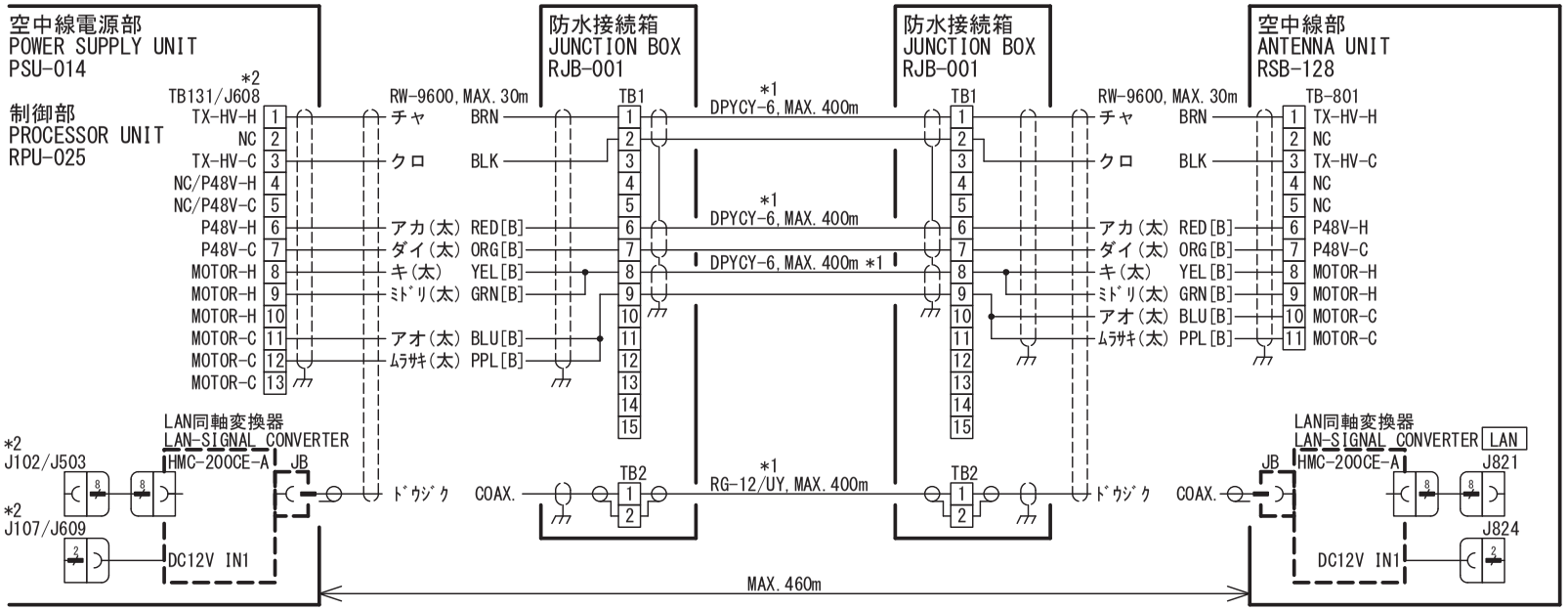

注記
＊１）造船所手配。
＊２）併記された番号は、PSU-014/RPU-025の順。

NOTE
*1: SHIPYARD SUPPLY.
*2: THE CONNECTOR NUMBERS ARE SHOWN AS PSU-014/RPU-025 ORDER.

DRAWN 15/Sep/2017 T. YAMASAKI			TITLE RJB-001
CHECKED 15/Sep/2017 H. MAKI			名 称 防水接続箱（空中線ケーブル延長）
APPROVED 15/Sep/2017 H.MAKI	FAR-2218 ser. FAR-3210 ser.		相互結線図
			NAME JUNCTION BOX (ANTENNA CABLE EXTENSION)
DWG. No. C3616-C02- G	REF. No.		INTERCONNECTION DIAGRAM

FURUNO ELECTRIC CO., LTD.

FURUNO

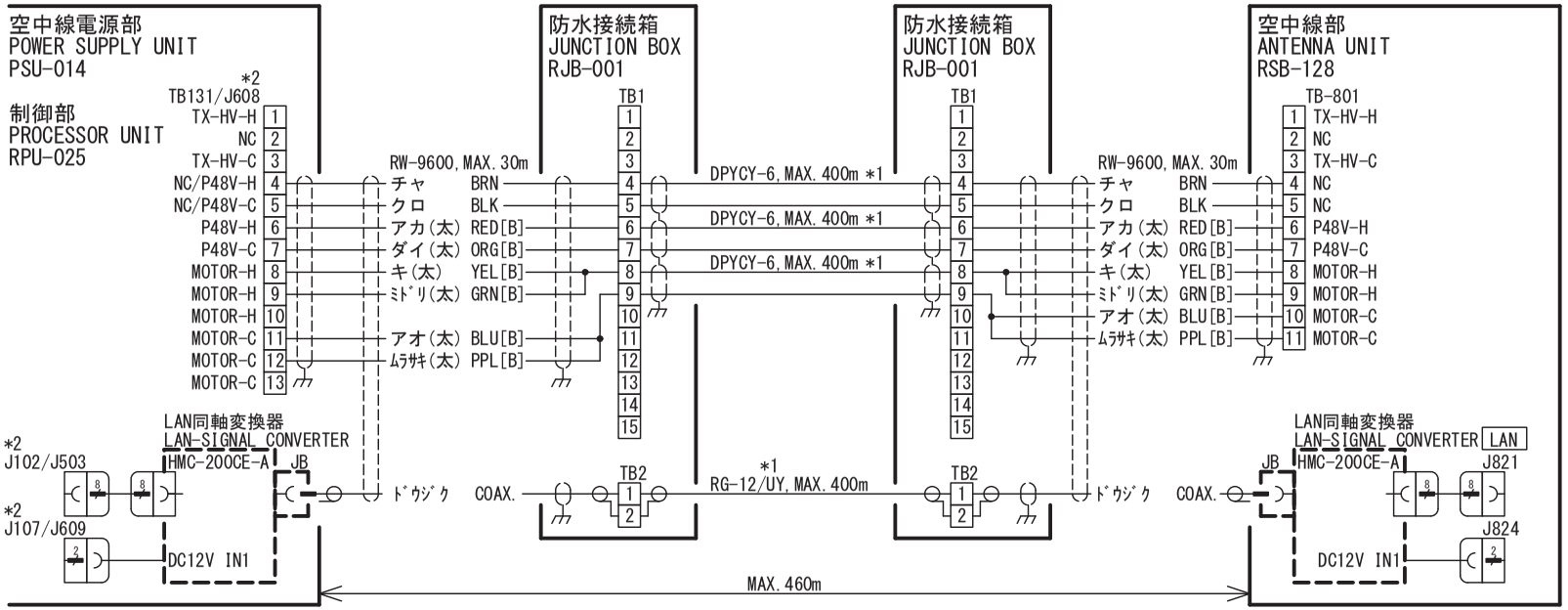

注記
＊１）造船所手配。
＊２）併記された番号は、PSU-014/RPU-025の順。

NOTE
*1: SHIPYARD SUPPLY.
*2: THE CONNECTOR NUMBERS ARE SHOWN AS PSU-014/RPU-025 ORDER.

DRAWN 1/Nov/2019 T. YAMASAKI			TITLE RJB-001
CHECKED 1/Nov/2019 H. MAKI	FAR-3320-NXT FAR-3220-NXT(-BB)		名 称 防水接続箱（空中線ケーブル延長/固体化）
APPROVED 7/Nov/2019 H.MAKI	FAR-2328-NXT FAR-2228-NXT(-BB)		相互結線図
			NAME JUNCTION BOX (CABLE EXTENSION/SOLID)
DWG. No. C3679-C03- A	REF. No.		INTERCONNECTION DIAGRAM

FURUNO ELECTRIC CO., LTD.