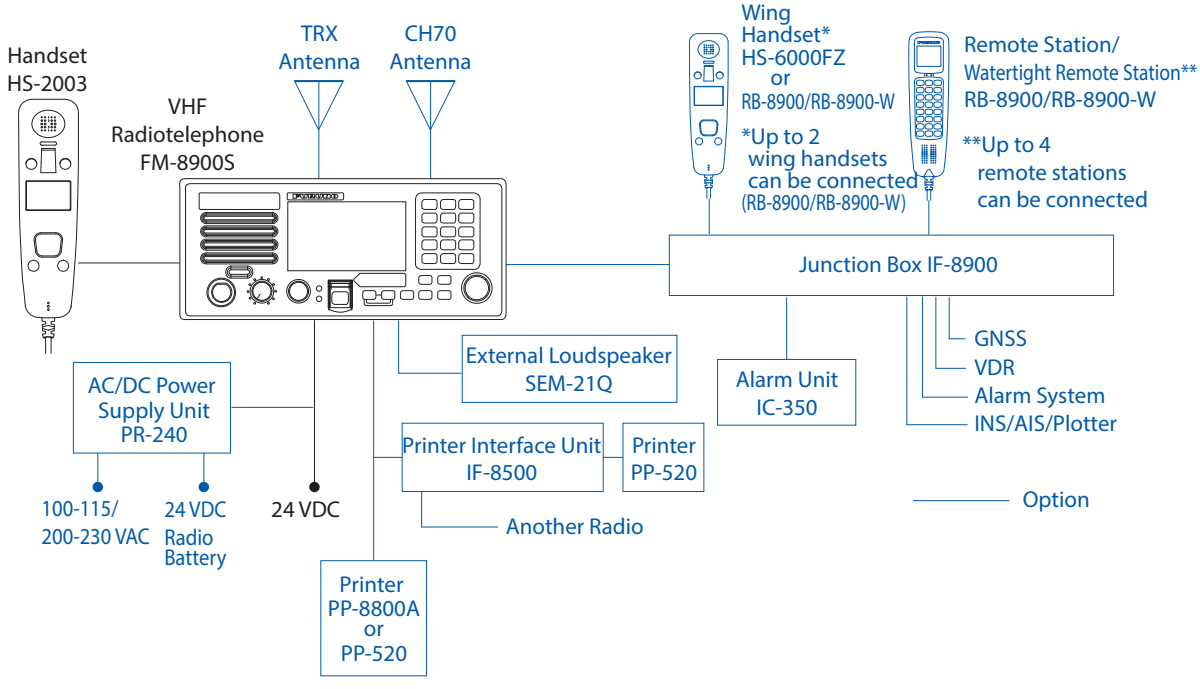INTERCONNECTION DIAGRAM